2010 Ninja® ZX™-6R

PARTS DIAGRAM

Owner's Tools(R9F-RAFA)

Kawasaki
Let the Good Times Roll®

F2810

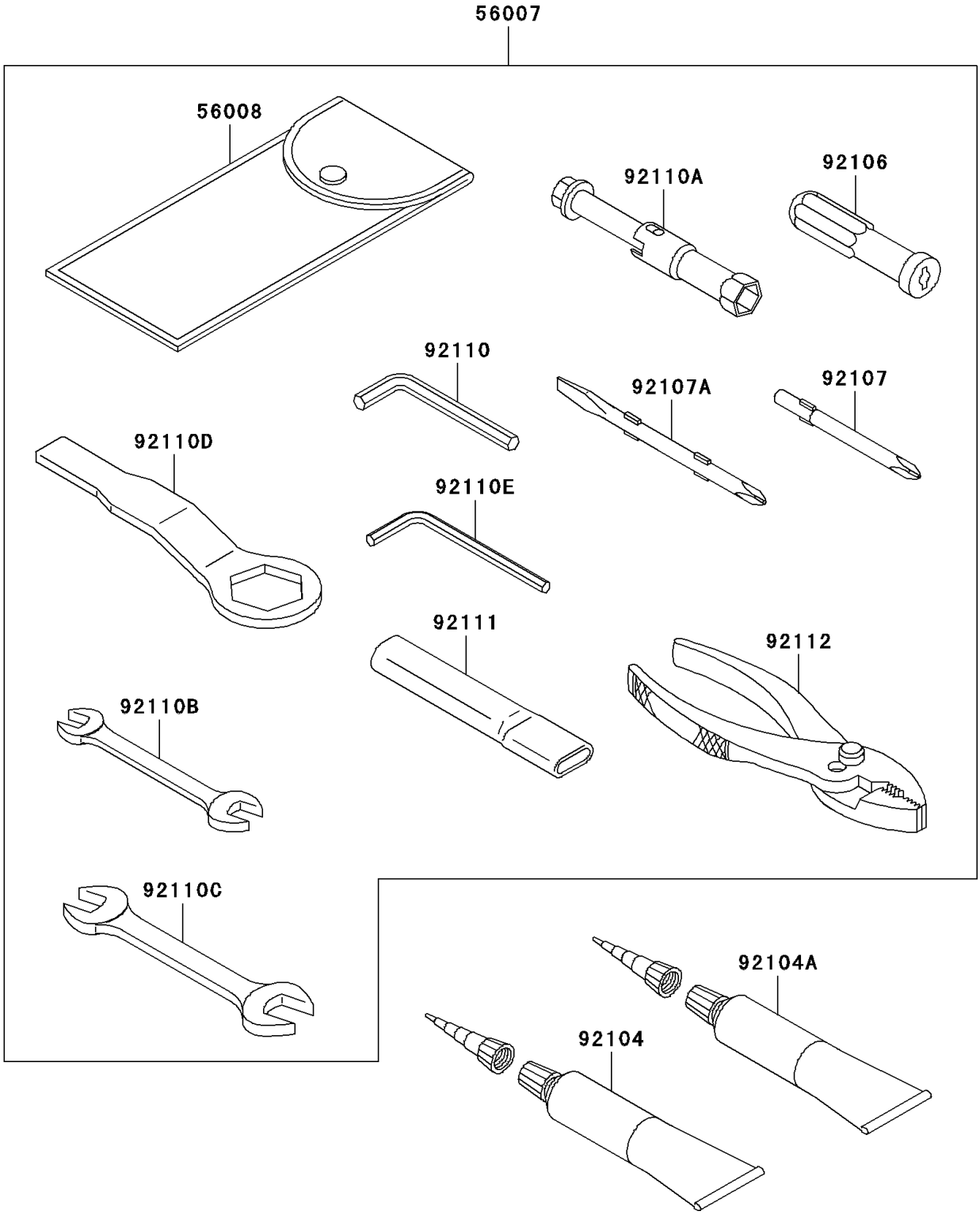

© 2026 Kawasaki Motors Corp., U.S.A.

2010 Ninja® ZX™-6R

PARTS LIST

Owner's Tools(R9F-RAFA)

Kawasaki
Let the Good Times Roll®

ITEM NAME	PART NUMBER	QUANTITY

© 2026 Kawasaki Motors Corp., U.S.A.