# 2010 Ninja® ZX™-6R

## PARTS DIAGRAM

### Radiator

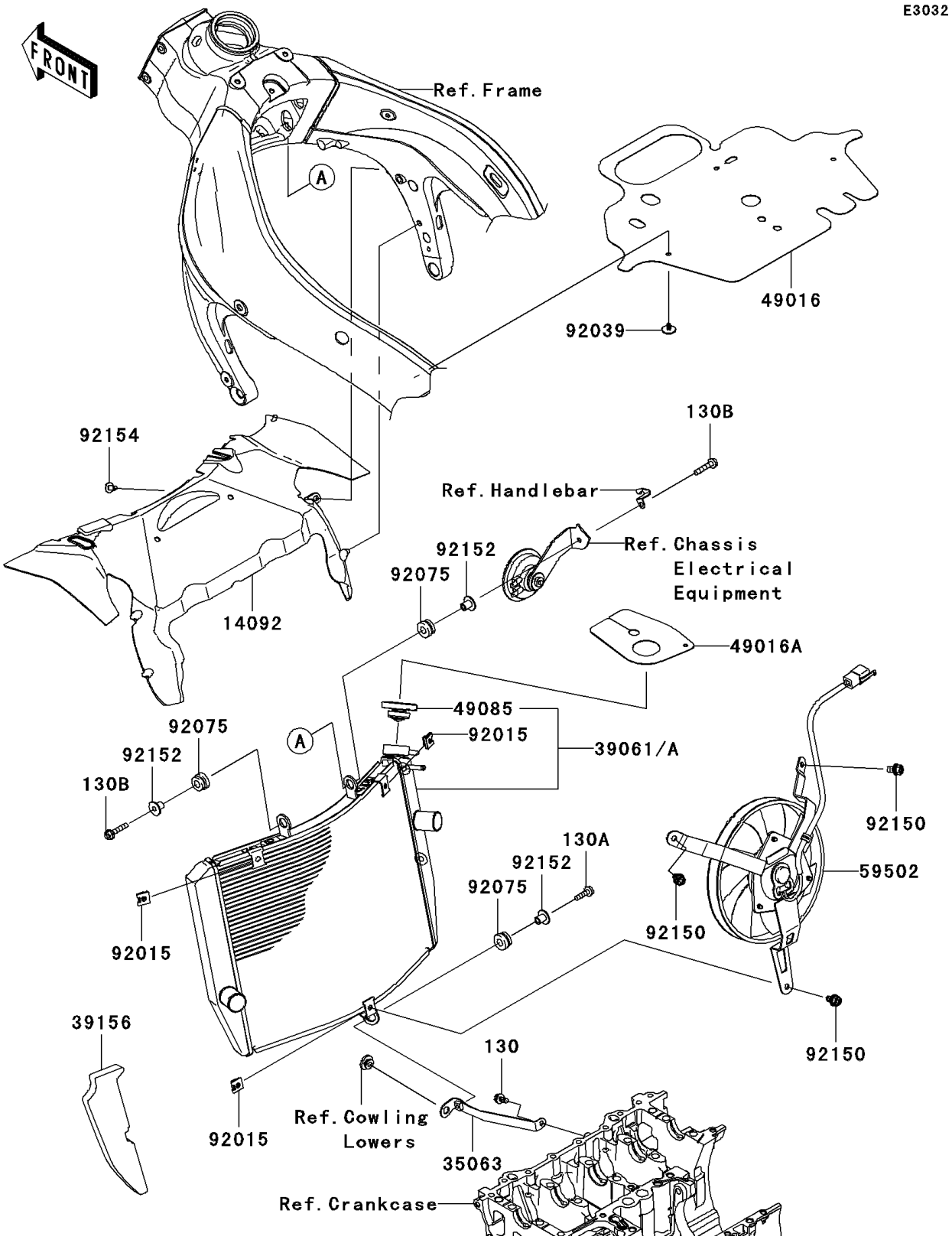


© 2026 Kawasaki Motors Corp., U.S.A.

# 2010 Ninja® ZX™-6R

## PARTS LIST

### Radiator

| ITEM NAME | PART NUMBER | QUANTITY |
|---|---|---|
| BOLT-FLANGED,6X14 (Ref # 130) | 130CA0614 | 1 |
| BOLT-FLANGED,6X22 (Ref # 130A) | 130CA0622 | 1 |
| BOLT-FLANGED,6X30 (Ref # 130B) | 130CA0630 | 2 |
| COVER,RAD. UPP (Ref # 14092) | 14092-0004 | 1 |
| STAY,RAD. LWR (Ref # 35063) | 35063-0592 | 1 |
| RADIATOR-ASSY (Ref # 39061) | 39061-0149 | 1 |
| RADIATOR-ASSY (Ref # 39061A) | 39061-0161 | 1 |
| PAD,RAD. LH (Ref # 39156) | 39156-0467 | 1 |
| COVER-SEAL,ENG RR (Ref # 49016) | 49016-0055 | 1 |
| COVER-SEAL,RESONATOR (Ref # 49016A) | 49016-0067 | 1 |
| CAP-ASSY-PRESSURE (Ref # 49085) | 49085-1066 | 1 |
| FAN-ASSY (Ref # 59502) | 59502-0046 | 1 |
| NUT (Ref # 92015) | 92015-1487 | 3 |
| RIVET (Ref # 92039) | 92039-0065 | 1 |
| DAMPER,RUBBER (Ref # 92075) | 92075-1123 | 3 |
| BOLT,6X12 (Ref # 92150) | 92150-1186 | 3 |
| COLLAR (Ref # 92152) | 92152-1074 | 3 |
| BOLT,SOCKET,6X12 (Ref # 92154) | 92154-0204 | 1 |

© 2026 Kawasaki Motors Corp., U.S.A.