2018 KX™450F

PARTS DIAGRAM

Water Pipe

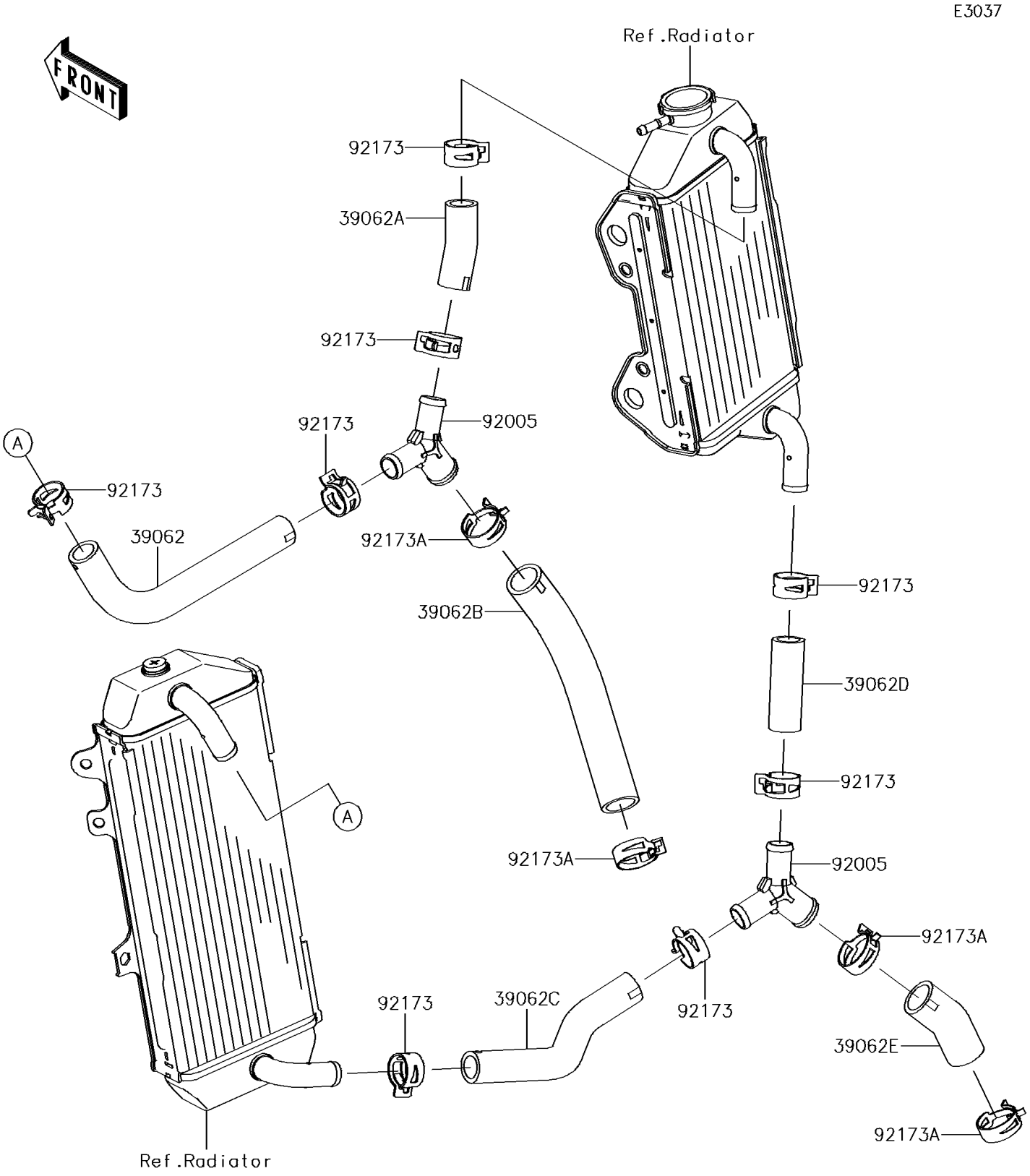

© 2026 Kawasaki Motors Corp., U.S.A.

2018 KX™450F

PARTS LIST

Water Pipe

ITEM NAME	PART NUMBER	QUANTITY
HOSE-COOLING,RAD.LH UPP-FIT. (Ref # 39062)	39062-0707	1
HOSE-COOLING,RAD.RH UPP-FIT. (Ref # 39062A)	39062-0708	1
HOSE-COOLING,CYLINDER-FITTING (Ref # 39062B)	39062-0709	1
HOSE-COOLING,RAD.LH LWR-FIT. (Ref # 39062C)	39062-0710	1
HOSE-COOLING,RAD.RH LWR-FIT. (Ref # 39062D)	39062-0711	1
HOSE-COOLING,FITTING-PUMP (Ref # 39062E)	39062-0712	1
FITTING,3WAY (Ref # 92005)	92005-0808	2
CLAMP (Ref # 92173)	92173-1417	8
CLAMP (Ref # 92173A)	92173-1464	4

© 2026 Kawasaki Motors Corp., U.S.A.