2007 KLX250S

PARTS DIAGRAM

Seat

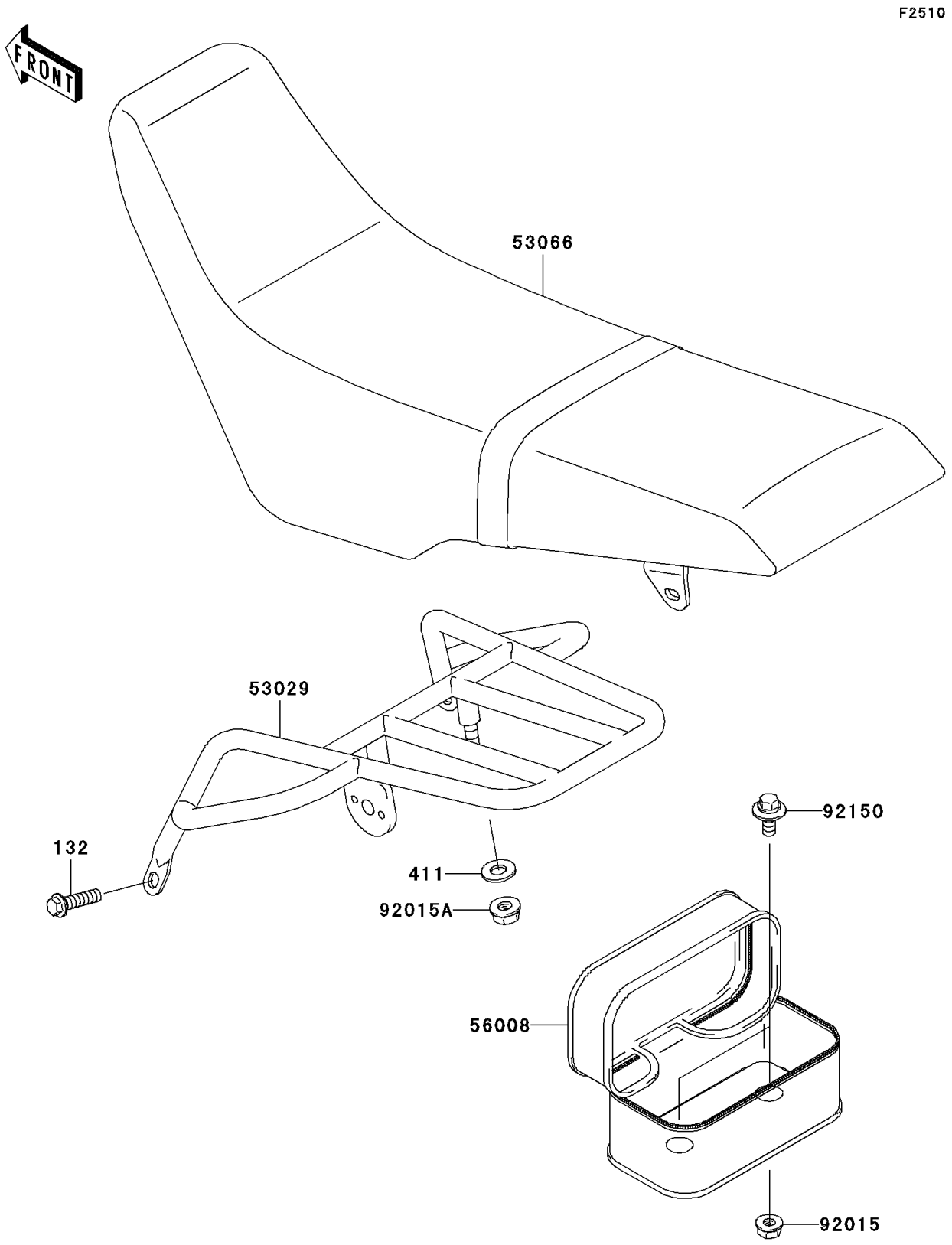

© 2026 Kawasaki Motors Corp., U.S.A.

2007 KLX250S

PARTS LIST

Seat

ITEM NAME	PART NUMBER	QUANTITY
BOLT-FLANGED-SMALL,8X30 (Ref # 132)	132G0830	2
WASHER-PLAIN,8MM (Ref # 411)	411B0800	2
CARRIER (Ref # 53029)	53029-1146	1
SEAT-ASSY,DUAL,W/BAND,GRN/BLK (Ref # 53066)	53066-0095-336	1
BAG,TOOL,BLACK (Ref # 56008)	56008-1074-MA	1
NUT,FLANGED,6MM (Ref # 92015)	92015-1078	2
NUT,8MM (Ref # 92015A)	92015-1143	2
BOLT,6X14 (Ref # 92150)	92150-1340	2

© 2026 Kawasaki Motors Corp., U.S.A.