2006 KLX125

PARTS DIAGRAM

Handlebar

F2310

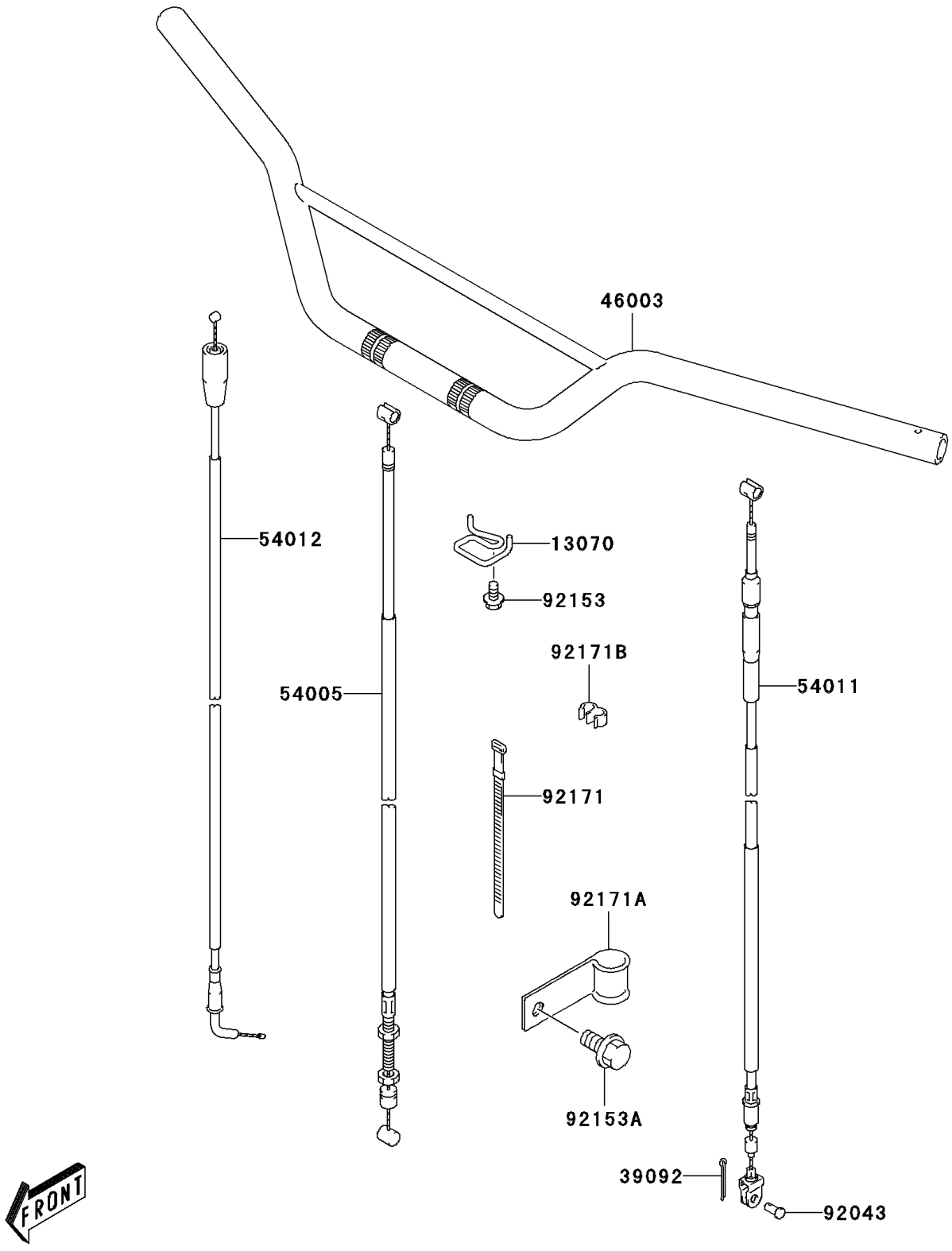

© 2026 Kawasaki Motors Corp., U.S.A.

2006 KLX125

PARTS LIST

Handlebar

ITEM NAME	PART NUMBER	QUANTITY
GUIDE,CABLE (Ref # 13070)	13070-S008	1
PIN-HAIR,FR FOOTREST COTTER (Ref # 39092)	39092-S004	1
HANDLE,B.SILVER (Ref # 46003)	46003-S003-530	1
CABLE-BRAKE (Ref # 54005)	54005-S003	1
CABLE-CLUTCH (Ref # 54011)	54011-S001	1
CABLE-THROTTLE (Ref # 54012)	54012-S004	1
PIN,CLUTCH CABLE (Ref # 92043)	92043-S021	1
BOLT (Ref # 92153)	92153-S011	1
BOLT (Ref # 92153A)	92153-S143	1
CLAMP,L=90 (Ref # 92171)	92171-S051	1
CLAMP,FRONT BRAKE CABLE (Ref # 92171A)	92171-S053	1
CLAMP (Ref # 92171B)	92171-S065	2

© 2026 Kawasaki Motors Corp., U.S.A.