2006 KLX125

PARTS DIAGRAM

Kickstarter Mechanism

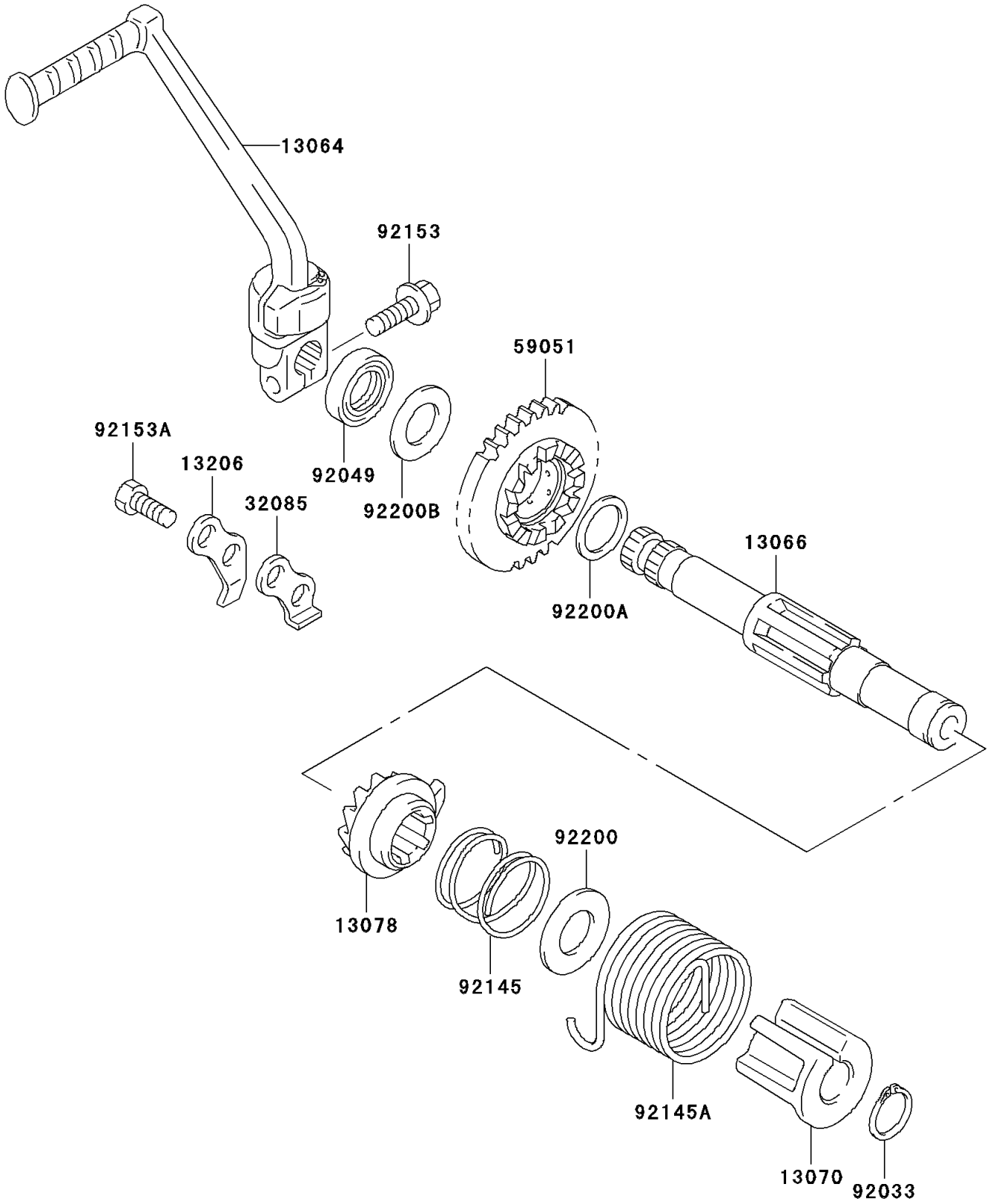

© 2026 Kawasaki Motors Corp., U.S.A.

2006 KLX125

PARTS LIST

Kickstarter Mechanism

ITEM NAME	PART NUMBER	QUANTITY
LEVER-ASSY-KICK (Ref # 13064)	13064-S002	1
SHAFT-KICK (Ref # 13066)	13066-S001	1
GUIDE,KICK STARTER SHAFT (Ref # 13070)	13070-S006	1
RATCHET,KICK (Ref # 13078)	13078-S001	1
GUIDE-KICK,KICK STARTER (Ref # 13206)	13206-S001	1
STOPPER (Ref # 32085)	32085-S003	1
GEAR-SPUR,KICK STARTER DRIVE (Ref # 59051)	59051-S002	1
RING-SNAP (Ref # 92033)	92033-S034	1
SEAL-OIL (Ref # 92049)	92049-S023	1
SPRING (Ref # 92145)	92145-S042	1
SPRING (Ref # 92145A)	92145-S045	1
BOLT (Ref # 92153)	92153-S142	1
BOLT (Ref # 92153A)	92153-S482	2
WASHER (Ref # 92200)	92200-S054	1
WASHER (Ref # 92200A)	92200-S063	1
WASHER,16X30X1 (Ref # 92200B)	92200-S073	1

© 2026 Kawasaki Motors Corp., U.S.A.