2006 KLX125

PARTS DIAGRAM

Cam Chain/Tensioner

E1212

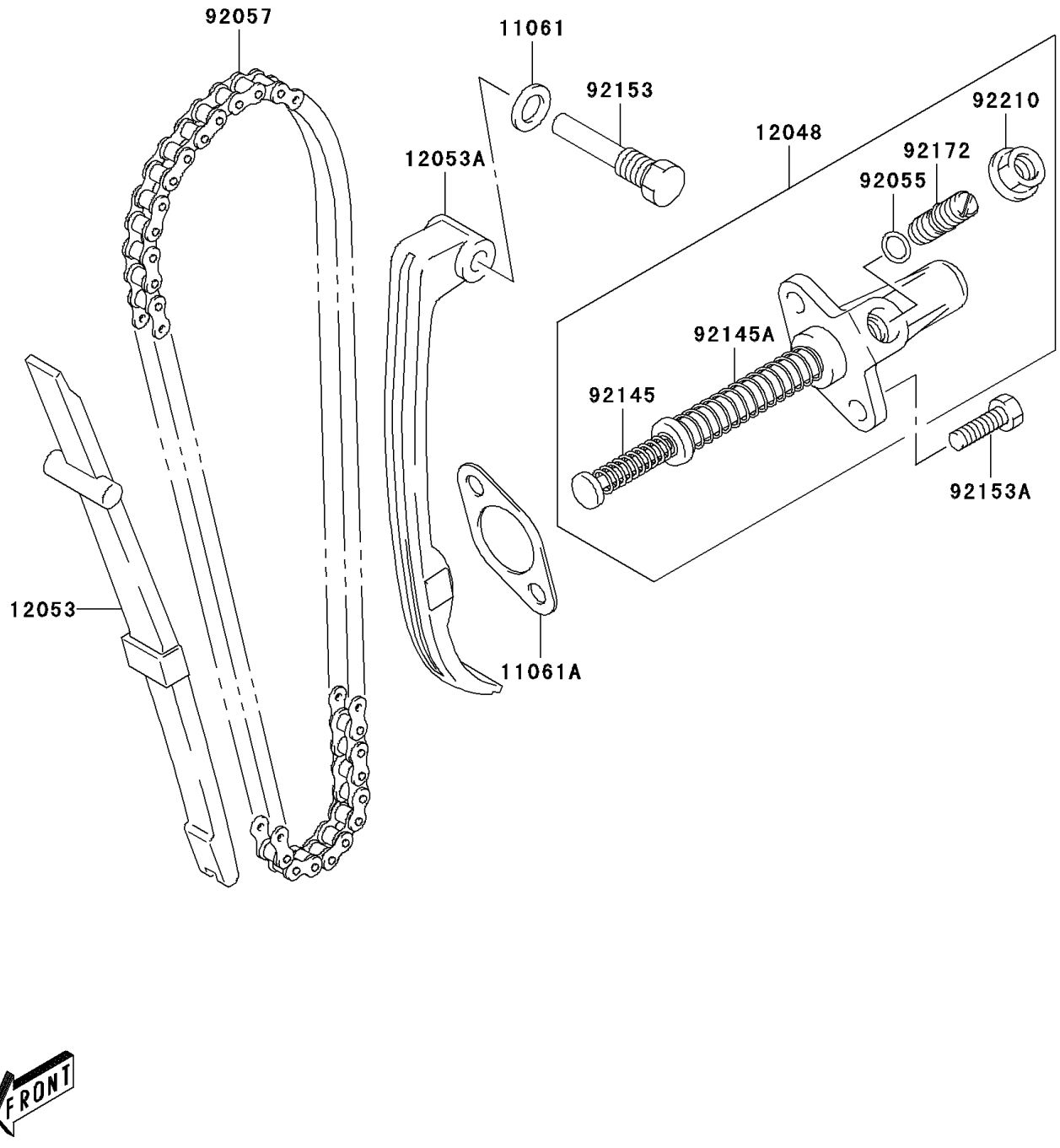

© 2026 Kawasaki Motors Corp., U.S.A.

2006 KLX125

PARTS LIST

Cam Chain/Tensioner

ITEM NAME	PART NUMBER	QUANTITY
GASKET,8.2X14X1 (Ref # 11061)	11061-S020	1
GASKET,TENSIONER ADJUSTER (Ref # 11061A)	11061-S038	1
TENSIONER-ASSY (Ref # 12048)	12048-S008	1
GUIDE-CHAIN (Ref # 12053)	12053-S005	1
GUIDE-CHAIN (Ref # 12053A)	12053-S006	1
RING-O,D=1.9 (Ref # 92055)	92055-S032	1
CHAIN (Ref # 92057)	92057-S004	1
SPRING (Ref # 92145)	92145-S038	1
SPRING (Ref # 92145A)	92145-S040	1
BOLT,CAM CHAIN TENSIONER (Ref # 92153)	92153-S054	1
BOLT (Ref # 92153A)	92153-S127	2
SCREW (Ref # 92172)	92172-S282	1
NUT (Ref # 92210)	92210-S026	1

© 2026 Kawasaki Motors Corp., U.S.A.