# 2006 KLX125

## PARTS DIAGRAM

### Cylinder

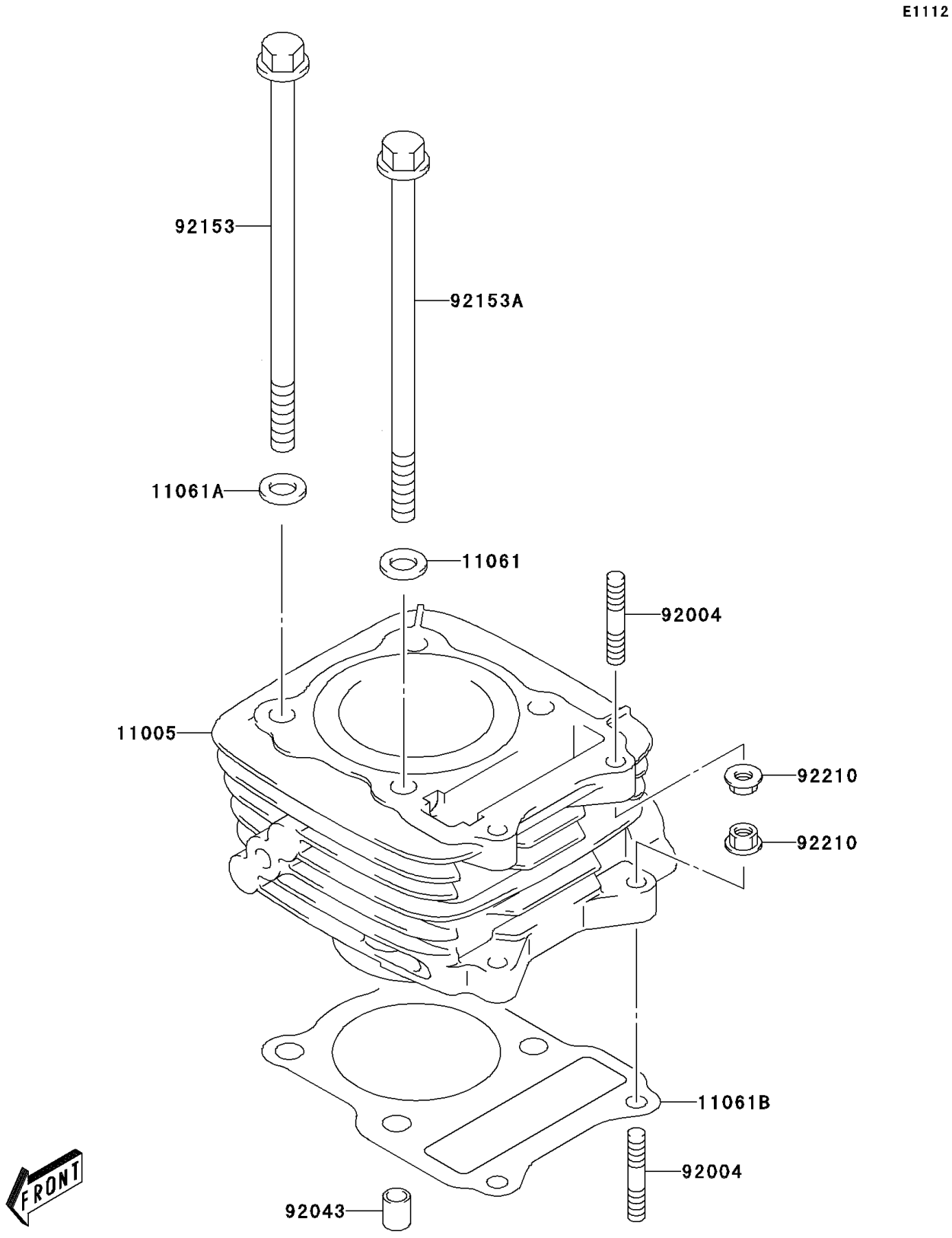


© 2026 Kawasaki Motors Corp., U.S.A.

# 2006 KLX125

## PARTS LIST

### Cylinder

| ITEM NAME | PART NUMBER | QUANTITY |
|---|---|---|
| CYLINDER-ENGINE (Ref # 11005) | 11005-S004 | 1 |
| GASKET,8.5X19X2.3 (Ref # 11061) | 11061-S032 | 2 |
| GASKET,8.5X17X2.3 (Ref # 11061A) | 11061-S034 | 2 |
| GASKET,CYLINDER (Ref # 11061B) | 11061-S035 | 1 |
| STUD (Ref # 92004) | 92004-S001 | 4 |
| PIN (Ref # 92043) | 92043-S019 | 2 |
| BOLT,L=165 (Ref # 92153) | 92153-S135 | 2 |
| BOLT,L=155 (Ref # 92153A) | 92153-S164 | 2 |
| NUT (Ref # 92210) | 92210-S004 | 4 |

© 2026 Kawasaki Motors Corp., U.S.A.