2006 KLX125

PARTS DIAGRAM

Cylinder Head

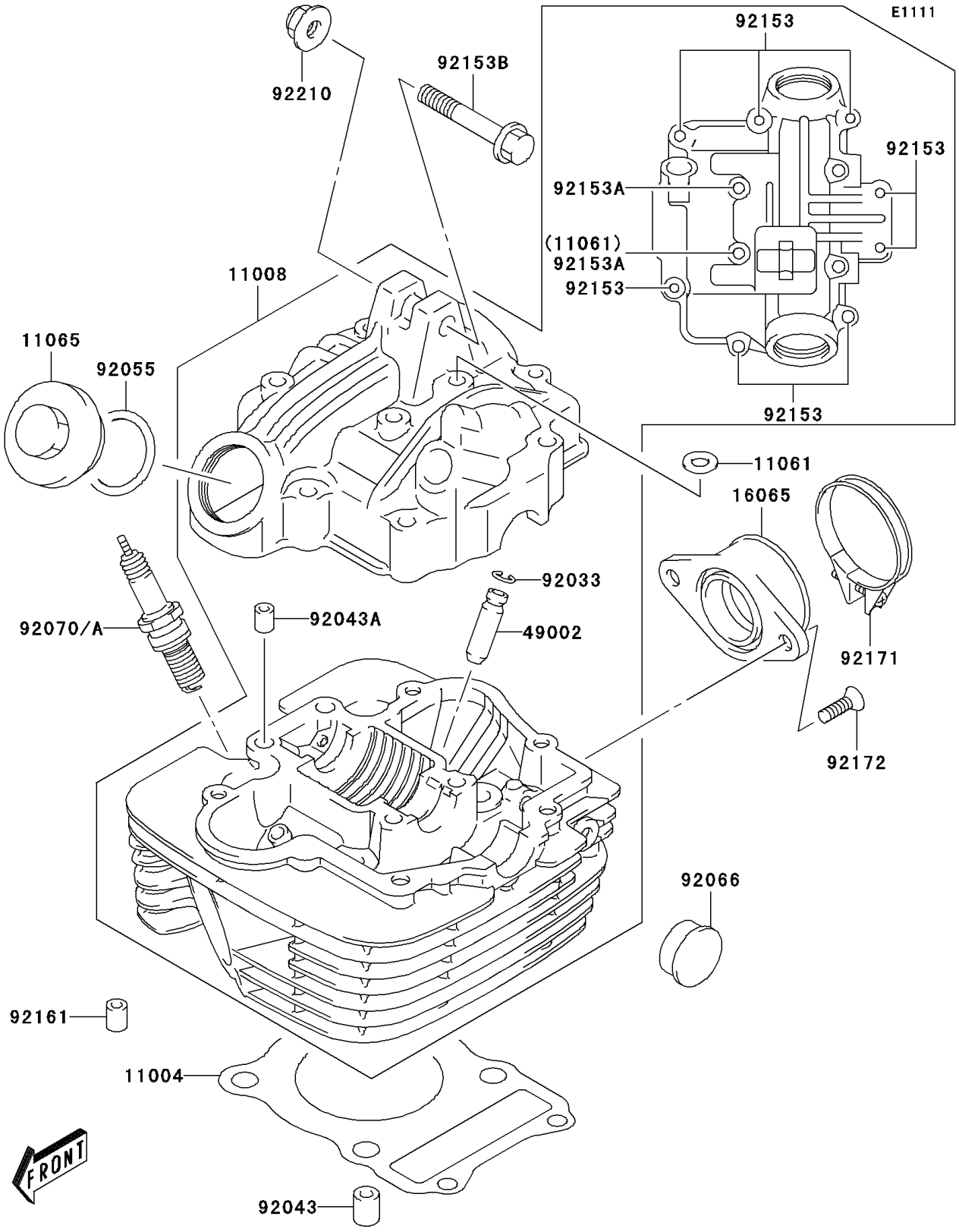

© 2026 Kawasaki Motors Corp., U.S.A.

2006 KLX125

PARTS LIST

Cylinder Head

ITEM NAME	PART NUMBER	QUANTITY
GASKET-HEAD (Ref # 11004)	11004-S003	1
HEAD-COMP-CYLINDER (Ref # 11008)	11008-S003	1
GASKET,5.8X13X1.2 (Ref # 11061)	11061-S001	1
CAP,INSPECTION (Ref # 11065)	11065-S014	2
HOLDER-CARBURETOR (Ref # 16065)	16065-S005	1
GUIDE-VALVE (Ref # 49002)	49002-S002	2
RING-SNAP (Ref # 92033)	92033-S021	2
PIN (Ref # 92043)	92043-S002	2
PIN,6.2X8X11 (Ref # 92043A)	92043-S004	2
RING-O,D=3 (Ref # 92055)	92055-S036	2
PLUG (Ref # 92066)	92066-S014	1
PLUG-SPARK,X24ESR-U(DN) (Ref # 92070)	92070-S013	1
PLUG-SPARK,DR8EA(NGK) (Ref # 92070A)	92070-S014	1
BOLT (Ref # 92153)	92153-S130	8
BOLT (Ref # 92153A)	92153-S131	2
BOLT (Ref # 92153B)	92153-S176	1
DAMPER,CYLINDER HEAD (Ref # 92161)	92161-S056	6
CLAMP,INTAKE PIPE (Ref # 92171)	92171-S049	1
SCREW (Ref # 92172)	92172-S008	2
NUT (Ref # 92210)	92210-S094	1

© 2026 Kawasaki Motors Corp., U.S.A.