2003 KLX110

PARTS DIAGRAM

Reflectors(CN)

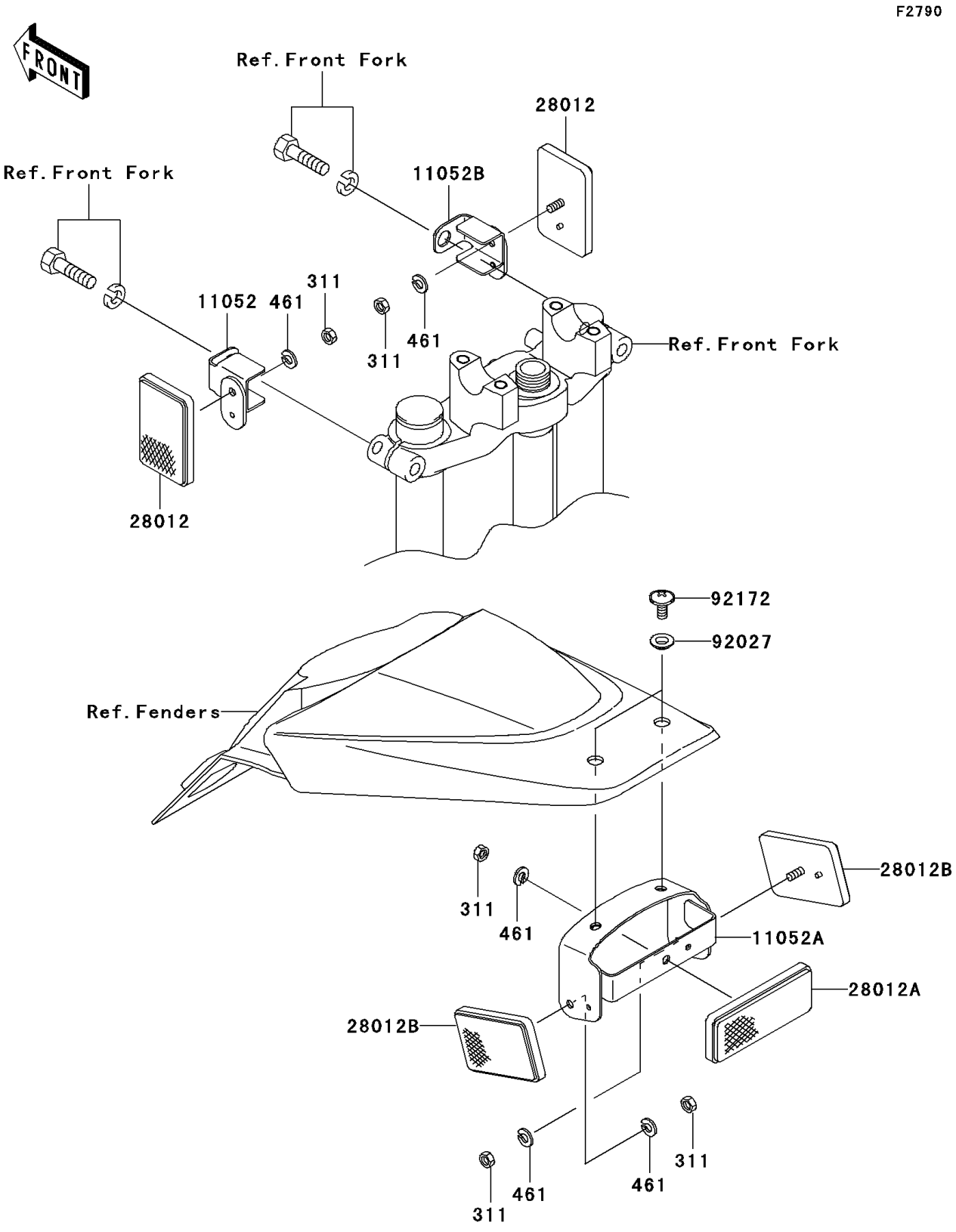

© 2026 Kawasaki Motors Corp., U.S.A.

2003 KLX110

PARTS LIST

Reflectors(CN)

ITEM NAME	PART NUMBER	QUANTITY
NUT-HEX (Ref # 311)	311H0500	5
WASHER-SPRING (Ref # 461)	461L0500	5
BRACKET,FRONT REFLECTOR,LH (Ref # 11052)	11052-1751	1
BRACKET,REAR REFLECTOR (Ref # 11052A)	11052-1752	1
BRACKET,FRONT REFLECTOR,RH (Ref # 11052B)	11052-1821	1
REFLECTOR-REFLEX (Ref # 28012)	28012-1003	2
REFLECTOR-REFLEX (Ref # 28012A)	28012-1077	1
REFLECTOR-REFLEX (Ref # 28012B)	28012-1088	2
COLLAR,L=3.5 (Ref # 92027)	92027-1018	2
SCREW,6X14 (Ref # 92172)	92172-0107	2

© 2026 Kawasaki Motors Corp., U.S.A.