# 2003 KLX110

## PARTS DIAGRAM

### Oil Pump

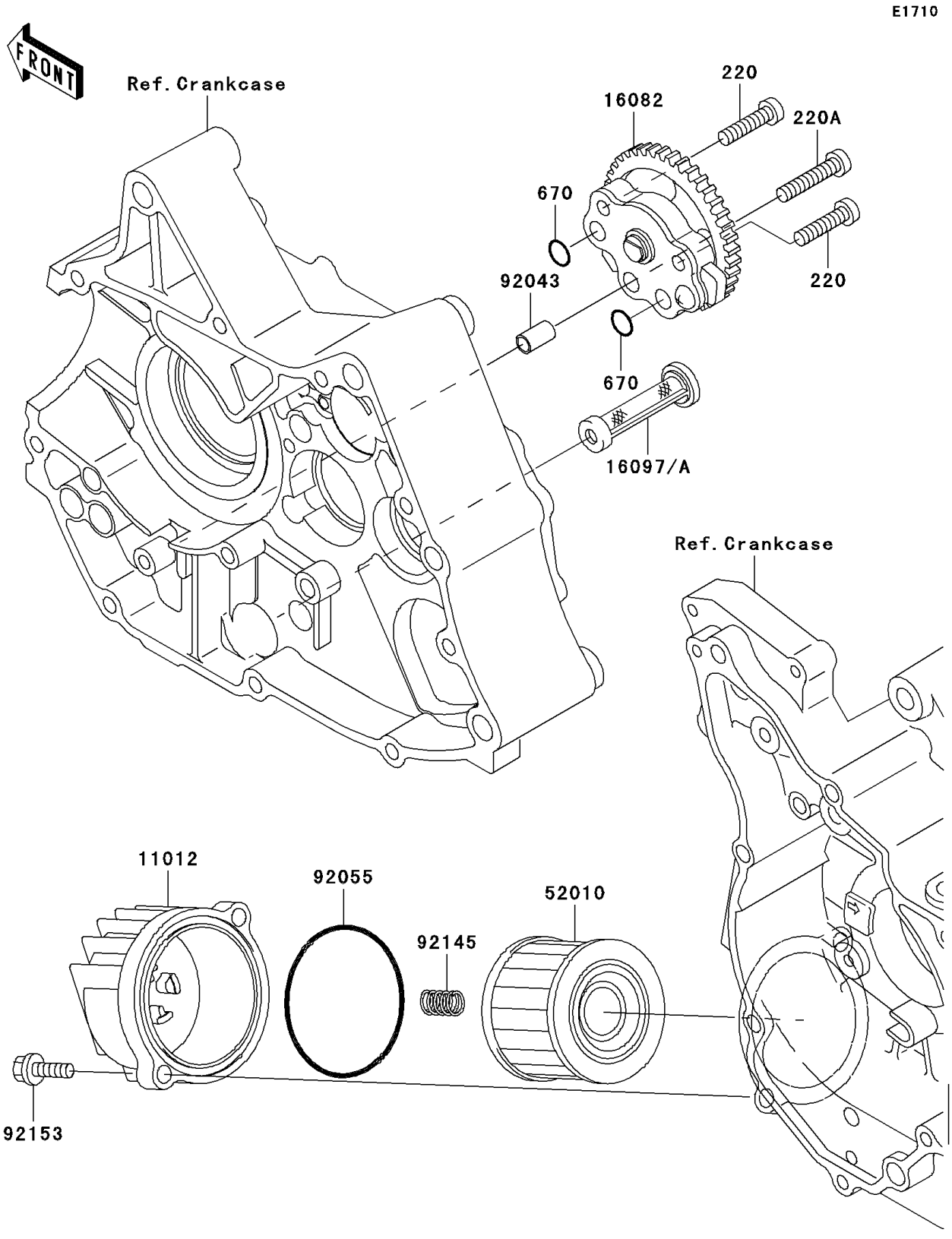


© 2026 Kawasaki Motors Corp., U.S.A.

# 2003 KLX110

## PARTS LIST

### Oil Pump

| ITEM NAME | PART NUMBER | QUANTITY |
|---|---|---|
| SCREW-PAN-CROS,6X25 (Ref # 220) | 220B0625 | 2 |
| SCREW-PAN-CROS,6X30 (Ref # 220A) | 220B0630 | 1 |
| O RING,10MM (Ref # 670) | 670B1510 | 2 |
| CAP (Ref # 11012) | 11012-1980 | 1 |
| PUMP-ASSY-OIL (Ref # 16082) | 16082-1052 | 1 |
| FILTER-ASSY-OIL (Ref # 16097A) | 16097-1071 | 1 |
| ELEMENT-OIL FILTER (Ref # 52010) | 52010-1053 | 1 |
| PIN,6.2X8X14 (Ref # 92043) | 92043-1263 | 1 |
| RING-O (Ref # 92055) | 92055-3018 | 1 |
| SPRING (Ref # 92145) | 92145-1091 | 1 |
| BOLT,M6X20 (Ref # 92153) | 92153-1184 | 2 |

© 2026 Kawasaki Motors Corp., U.S.A.