1999 Bayou 400 4X4

PARTS DIAGRAM

Labels

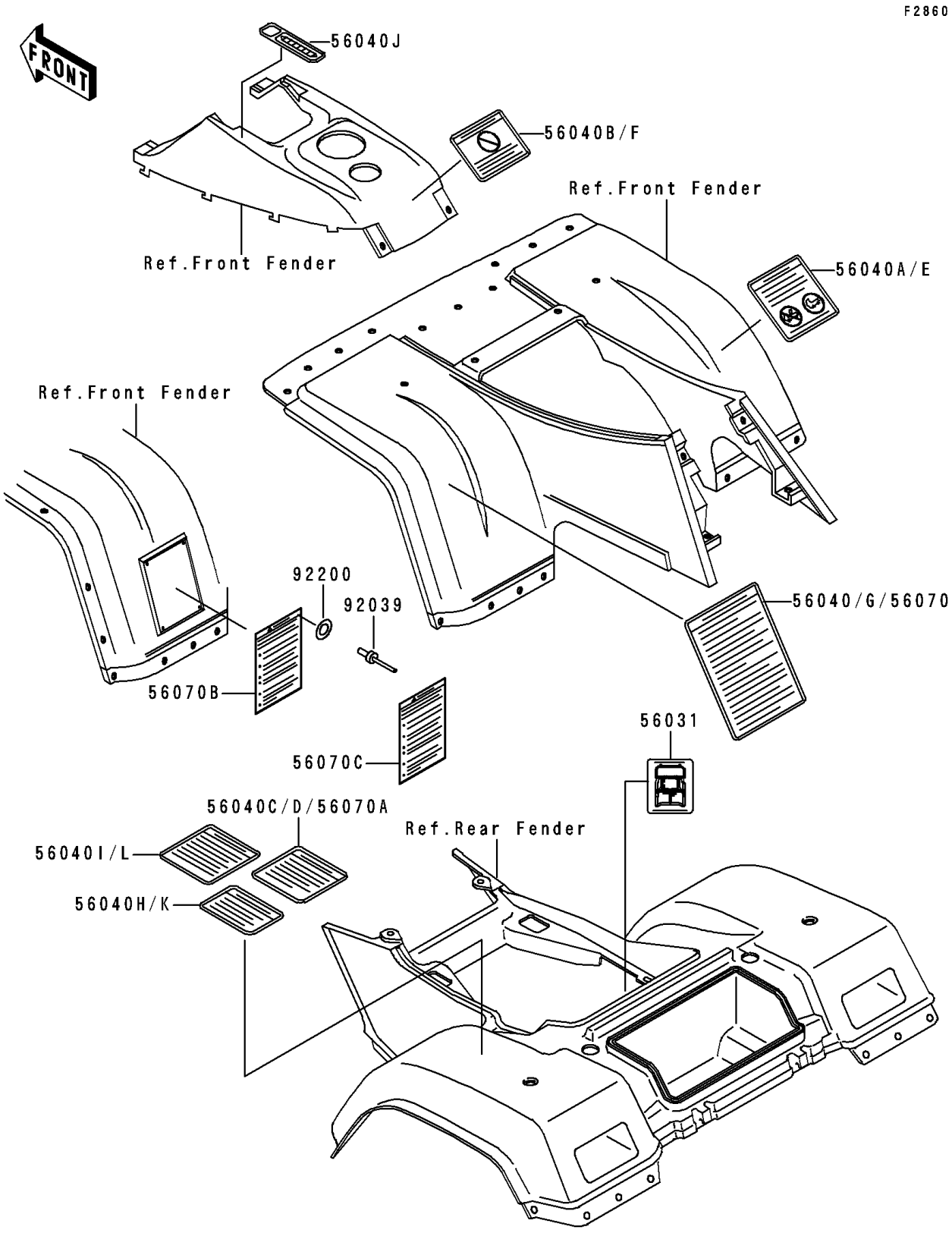

© 2026 Kawasaki Motors Corp., U.S.A.

1999 Bayou 400 4X4

PARTS LIST

Labels

ITEM NAME	PART NUMBER	QUANTITY
LABEL-MANUAL,BATTERY VENT (Ref # 56031)	56031-1806	1
LABEL-WARNING,TRANSPORT (Ref # 56040A)	56040-1261	1
LABEL-WARNING,UNDER 16 (Ref # 56040B)	56040-1276	1
LABEL-WARNING,TIRE INFO (Ref # 56040H)	56040-1330	1
LABEL-WARNING,MAX VEHICLE LOAD (Ref # 56040I)	56040-1331	1
LABEL-WARNING,SHIFT PATTERN (Ref # 56040J)	56040-1332	1
LABEL-WARNING,NO PASSENGER (Ref # 56070A)	56070-1141	1
LABEL-WARNING,SERIOUS INJURY (Ref # 56070B)	56070-1151	1
RIVET,3.2X8 (Ref # 92039)	92039-3763	6
WASHER,3.5X8X1 (Ref # 92200)	92200-1251	6
LABEL-WARNING,NO PASSENGER (Ref # 56040D)	56040-1280	1
LABEL-WARNING,TRANSPORT (Ref # 56040E)	56040-1283	1
LABEL-WARNING,AGE (Ref # 56040F)	56040-1325	1
LABEL-WARNING,TIRE INFO (Ref # 56040K)	56040-1337	1
LABEL-WARNING,MAX VEHICLE LOAD (Ref # 56040L)	56040-1338	1
LABEL-WARNING,GENERAL (Ref # 56070C)	56070-1163	1

© 2026 Kawasaki Motors Corp., U.S.A.