1998 Bayou 400 4X4

PARTS DIAGRAM

Front Hub

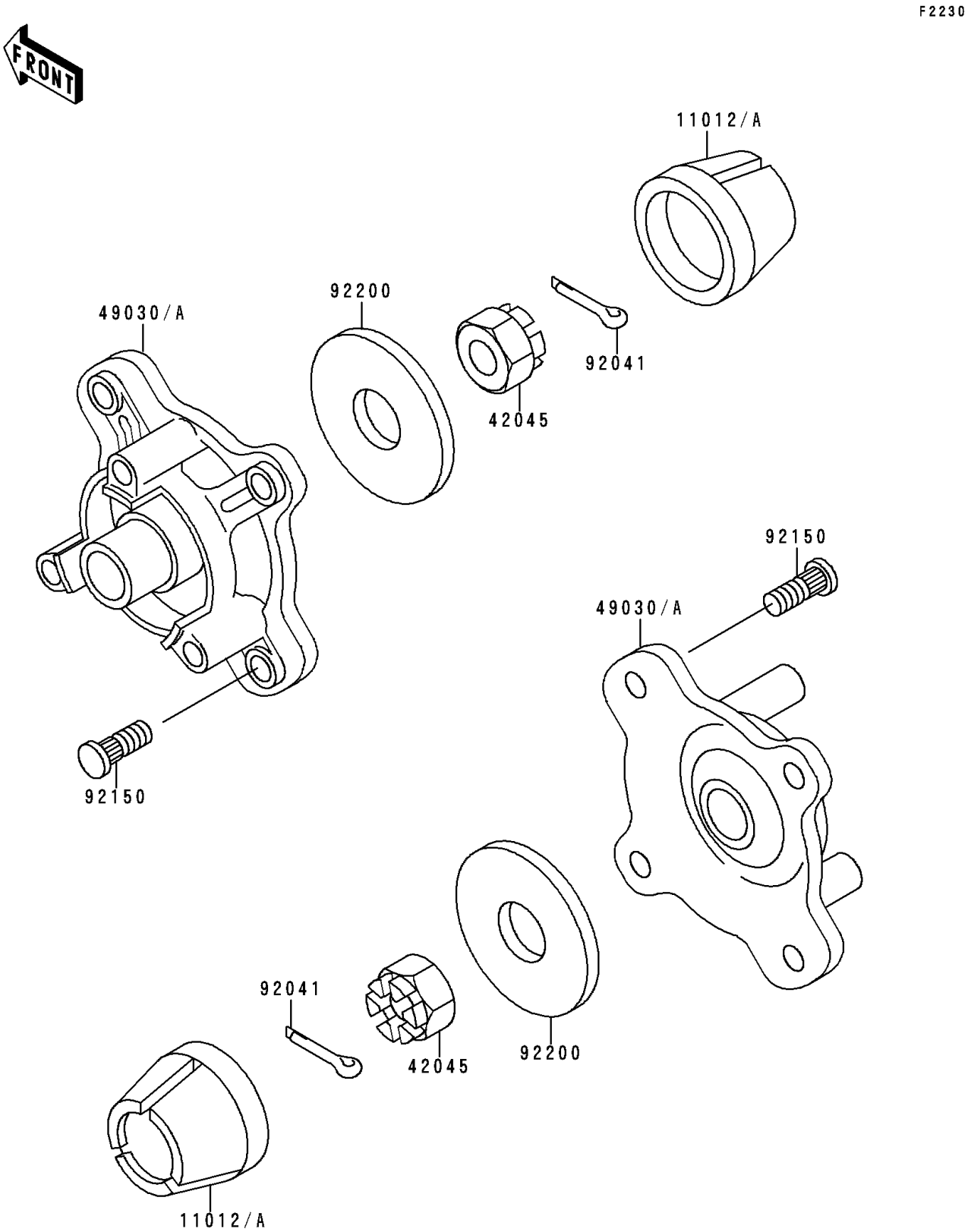

© 2026 Kawasaki Motors Corp., U.S.A.

1998 Bayou 400 4X4

PARTS LIST

Front Hub

ITEM NAME	PART NUMBER	QUANTITY
CAP,WHEEL (Ref # 11012A)	11012-1969	2
NUT,CASTLE,18MM (Ref # 42045)	42045-018	2
HUB,FR (Ref # 49030A)	49030-1116	2
COTTER,4.0X35 (Ref # 92041)	92041-1053	2
BOLT (Ref # 92150)	92150-1289	8
WASHER,18.5X52X4.5 (Ref # 92200)	92200-1139	2

© 2026 Kawasaki Motors Corp., U.S.A.