1998 Bayou 300 4X4

PARTS DIAGRAM

Chassis Electrical Equipment

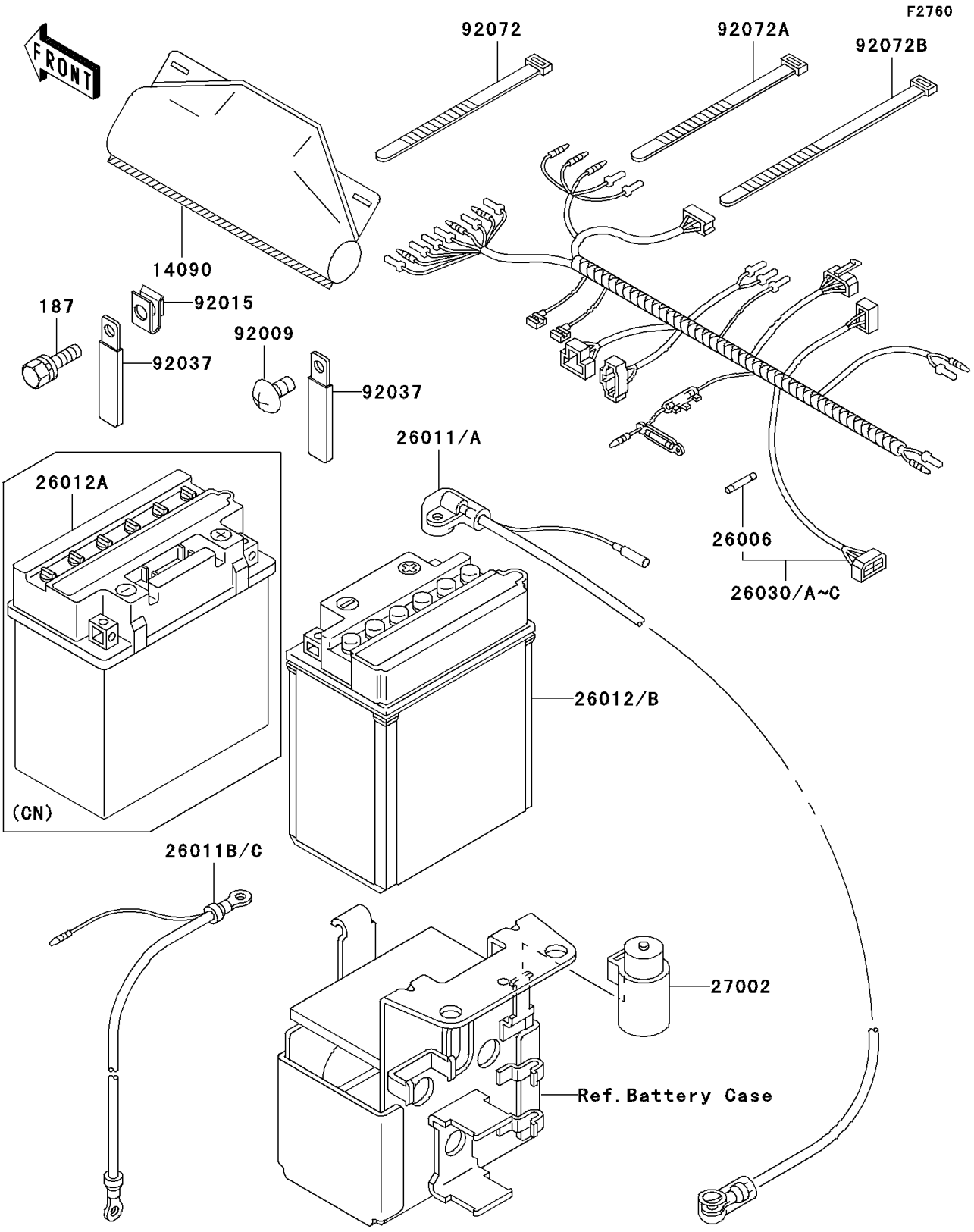

© 2026 Kawasaki Motors Corp., U.S.A.

1998 Bayou 300 4X4

PARTS LIST

Chassis Electrical Equipment

ITEM NAME	PART NUMBER	QUANTITY
BOLT-UPSET-WSP (Ref # 187)	187C0614	2
COVER,COUPLER (Ref # 14090)	14090-1611	1
FUSE,30A,L=30 (Ref # 26006)	26006-1059	2
HARNESS,MAIN (Ref # 26030)	26030-1523	1
RELAY-ASSY (Ref # 27002)	27002-1095	1
SCREW,TAPPING,4X8 (Ref # 92009)	92009-1155	3
NUT,6MM (Ref # 92015)	92015-1671	2
CLAMP,WIRING HARNESS,L=60 (Ref # 92037)	92037-1069	5
BAND,L=123 (Ref # 92072)	92072-030	3
BAND,L=149 (Ref # 92072A)	92072-031	5
BAND,L=188 (Ref # 92072B)	92072-1239	18
WIRE-LEAD,BATTERY(+) (Ref # 26011)	26011-1544	1
WIRE-LEAD,BATTERY(+) (Ref # 26011A)	26011-1545	1
WIRE-LEAD,BATTERY(-) (Ref # 26011B)	26011-1559	1
WIRE-LEAD,BATTERY(-) (Ref # 26011C)	26011-1560	1
BATTERY,YB14A-A2,12V 14AH (Ref # 26012)	26012-1146	1
BATTERY,YB16CL-B,12V 19AH (Ref # 26012A)	26012-1273	1

© 2026 Kawasaki Motors Corp., U.S.A.