1998 Bayou 300 4X4

PARTS DIAGRAM

Guard(s)

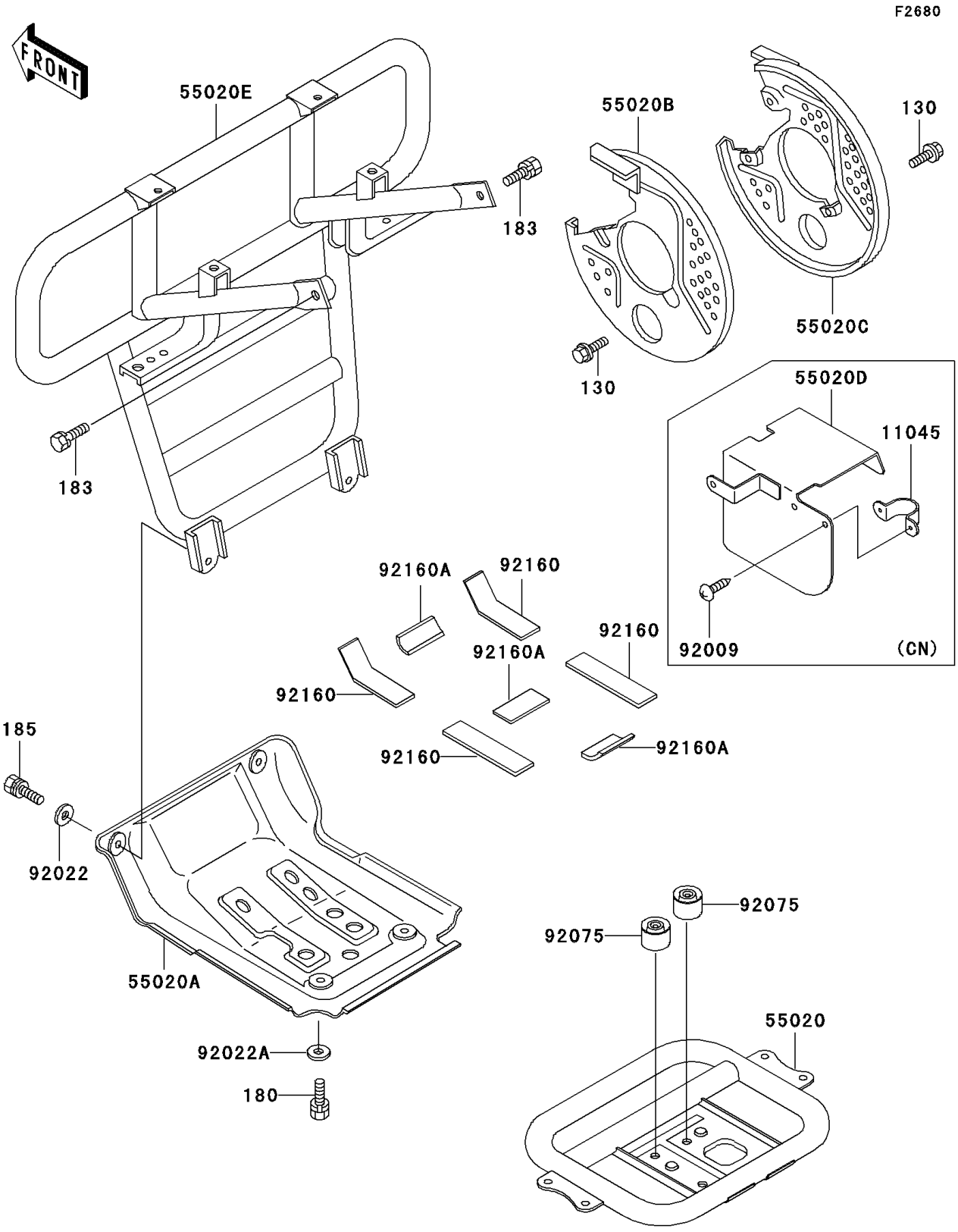

© 2026 Kawasaki Motors Corp., U.S.A.

1998 Bayou 300 4X4

PARTS LIST

Guard(s)

ITEM NAME	PART NUMBER	QUANTITY
BOLT-FLANGED,6X10 (Ref # 130)	130B0610	6
BOLT-UPSET-WS,6X16 (Ref # 180)	180J0616	2
BOLT-UPSET-WS-SMALL (Ref # 183)	183J0825	2
BOLT-UPSET-WSP-SMALL,8X25 (Ref # 185)	185J0825	2
GUARD,ENGINE (Ref # 55020)	55020-1301	1
GUARD,FRONT DIFF (Ref # 55020A)	55020-1303	1
GUARD,FRONT DISC,LH (Ref # 55020B)	55020-1304	1
GUARD,FRONT DISC,RH (Ref # 55020C)	55020-1305	1
GUARD,FR,S.GRAY (Ref # 55020E)	55020-1585-1U	1
WASHER,8.5X20X1.6,BLACK (Ref # 92022)	92022-1317	2
WASHER,6.5X20X1.6,BLACK (Ref # 92022A)	92022-1346	2
DAMPER (Ref # 92075)	92075-1896	2
DAMPER (Ref # 92160)	92160-1101	4
DAMPER (Ref # 92160A)	92160-1102	3
BRACKET,FENDER (Ref # 11045)	11045-1882	1
GUARD,SNOW (Ref # 55020D)	55020-1474	1
SCREW,TAPPING,5X10 (Ref # 92009)	92009-1332	2

© 2026 Kawasaki Motors Corp., U.S.A.