1998 Bayou 300 4X4

PARTS DIAGRAM

Footrests

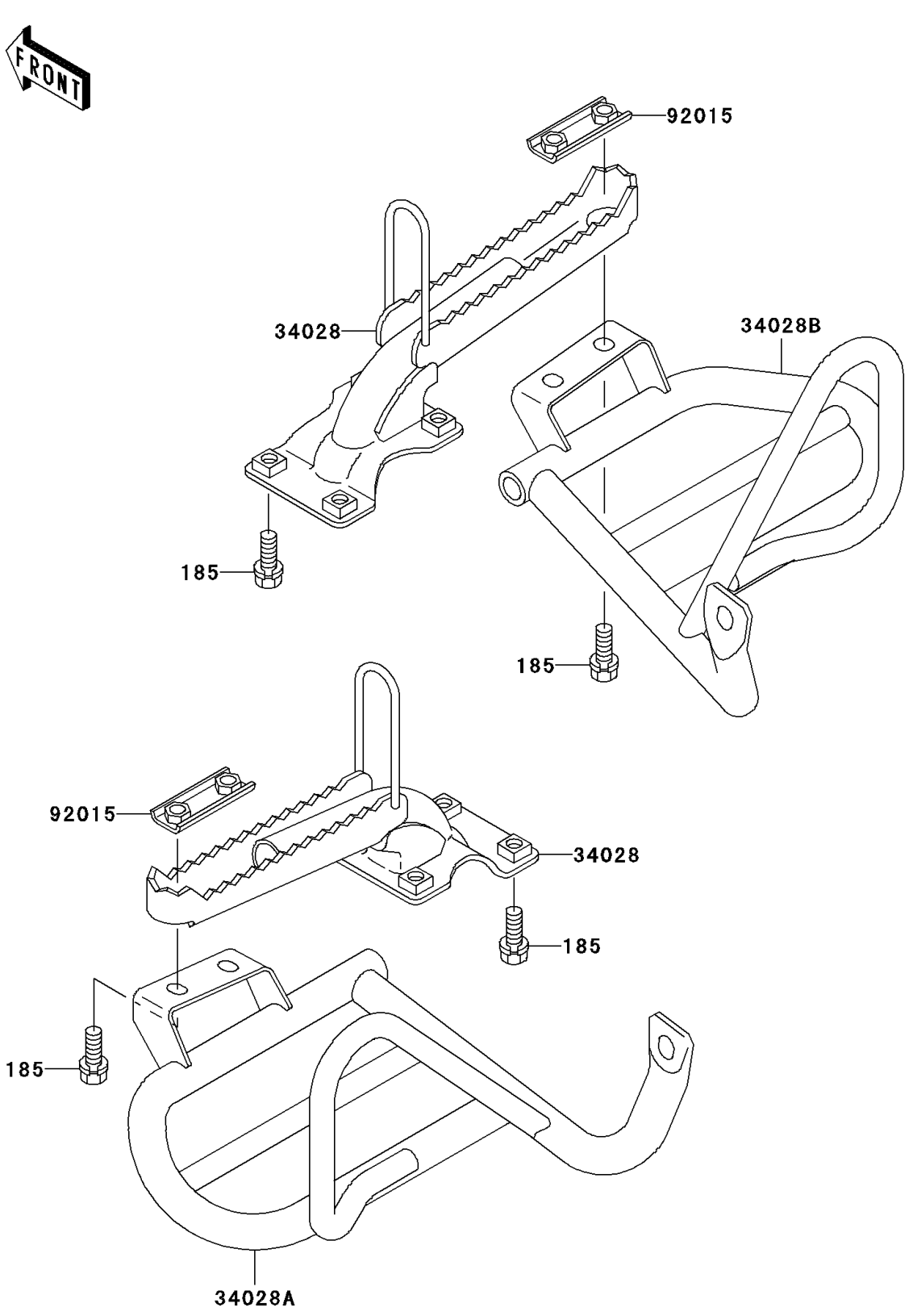

© 2026 Kawasaki Motors Corp., U.S.A.

1998 Bayou 300 4X4

PARTS LIST

Footrests

ITEM NAME	PART NUMBER	QUANTITY
BOLT-UPSET-WSP-SMALL,8X20 (Ref # 185)	185J0820	12
STEP (Ref # 34028)	34028-1271	2
STEP,FOOT BOARD,LH (Ref # 34028A)	34028-1399	1
STEP,FOOT BOARD,RH (Ref # 34028B)	34028-1400	1
NUT (Ref # 92015)	92015-1732	2

© 2026 Kawasaki Motors Corp., U.S.A.