1994 Bayou 300

PARTS DIAGRAM

Reflectors

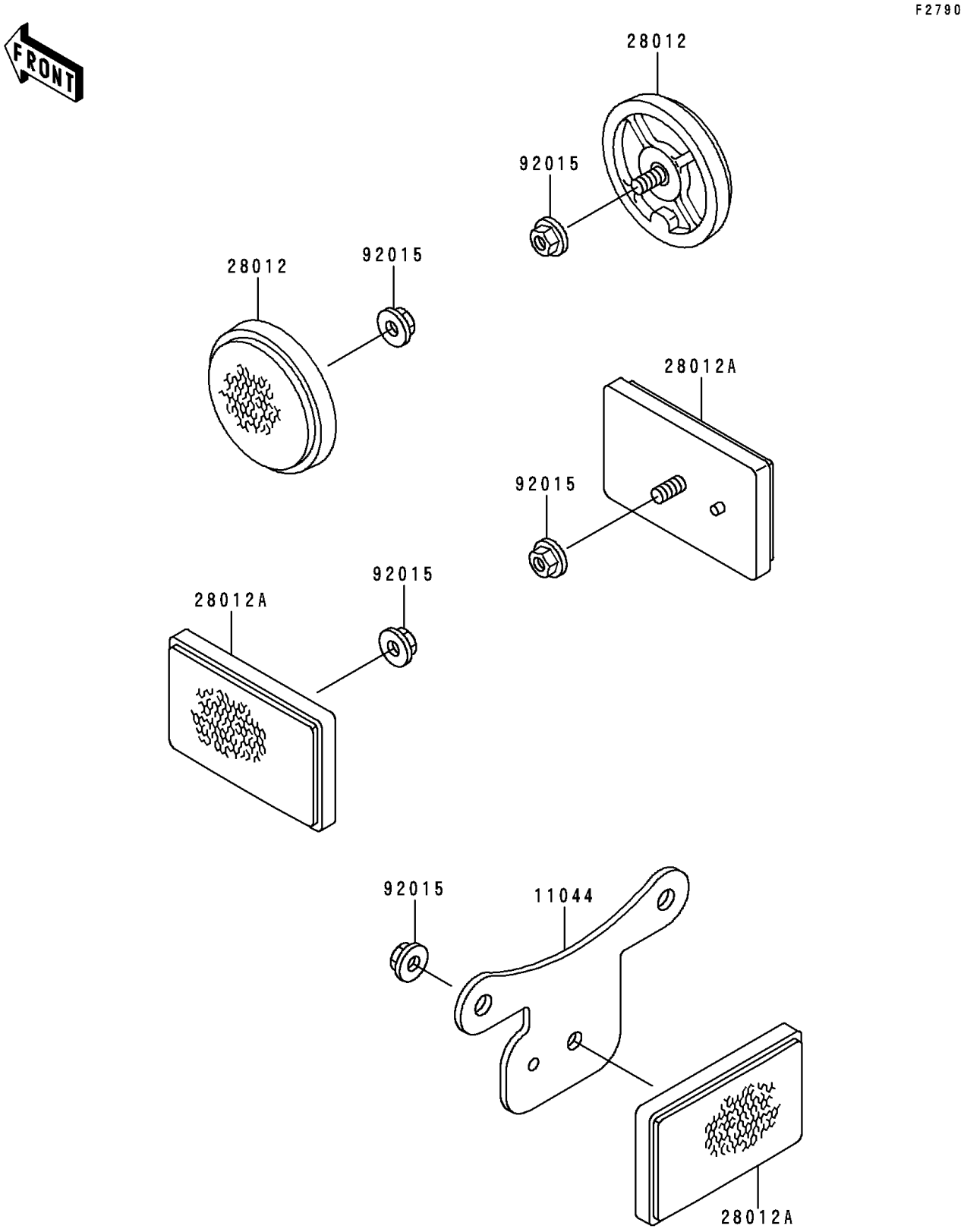

© 2026 Kawasaki Motors Corp., U.S.A.

1994 Bayou 300

PARTS LIST

Reflectors

ITEM NAME	PART NUMBER	QUANTITY
BRACKET,REFLCTOR (Ref # 11044)	11044-1426	1
REFLECTOR-REFLEX,FR (Ref # 28012)	28012-016	2
REFLECTOR-REFLEX,RR (Ref # 28012A)	28012-1054	3
NUT,FLANGED,5MM (Ref # 92015)	92015-1259	5

© 2026 Kawasaki Motors Corp., U.S.A.