1994 Bayou 300

PARTS DIAGRAM

Brake Pedal

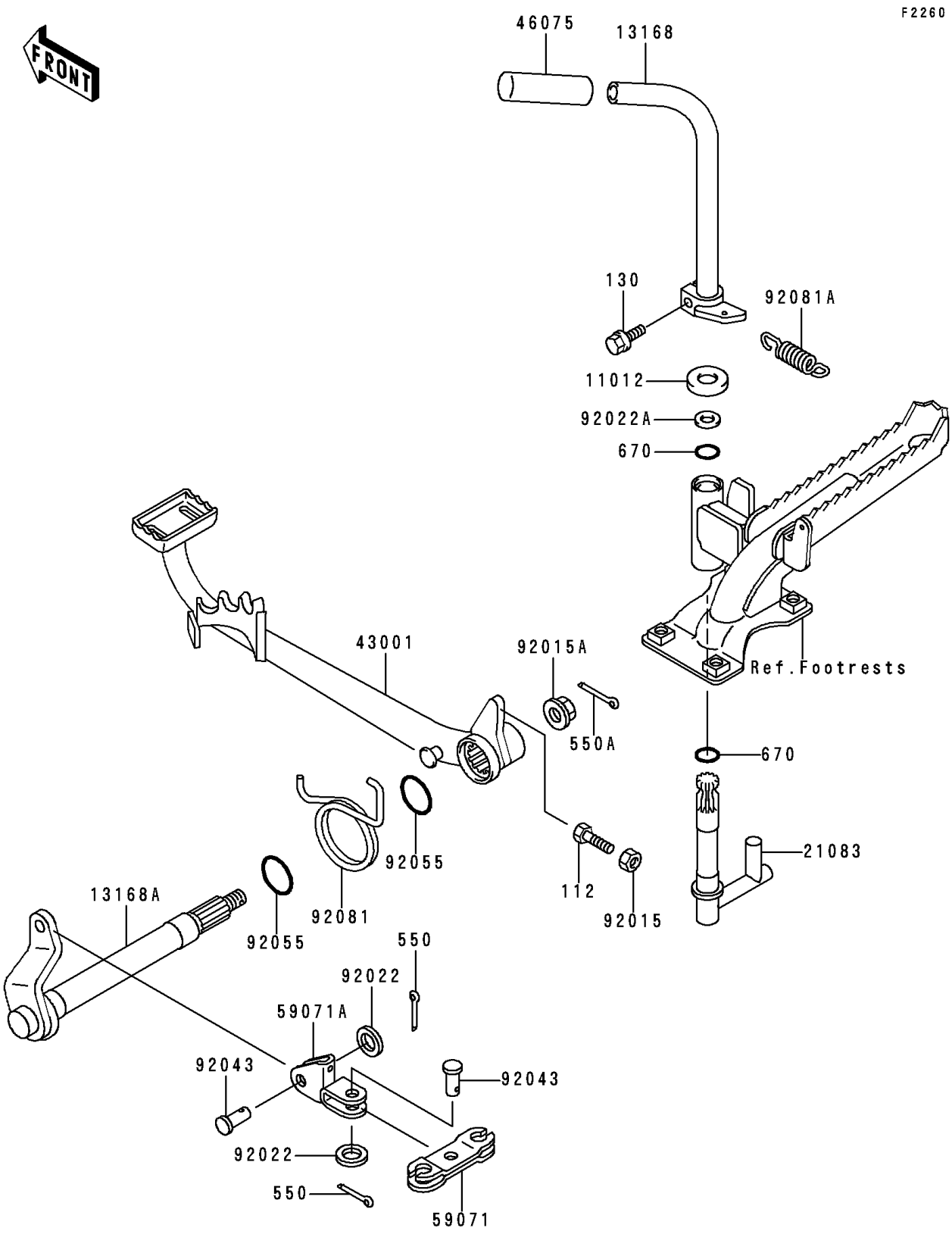

© 2026 Kawasaki Motors Corp., U.S.A.

1994 Bayou 300

PARTS LIST

Brake Pedal

ITEM NAME	PART NUMBER	QUANTITY
BOLT-UPSET (Ref # 112)	112D0622	1
BOLT-FLANGED,6X20,BLACK (Ref # 130)	130S0620	1
PIN-COTTER,2.0X15 (Ref # 550)	550D2015	2
PIN-COTTER,2.5X18 (Ref # 550A)	550D2518	1
O RING,12MM (Ref # 670)	670B2012	2
CAP,STEP (Ref # 11012)	11012-1482	1
LEVER,PARKING BRAKE (Ref # 13168)	13168-1282	1
LEVER,REAR BRAKE (Ref # 13168A)	13168-1366	1
ARM,PARKING BRAKE (Ref # 21083)	21083-1072	1
LEVER-BRAKE,PEDAL,RR (Ref # 43001)	43001-1236	1
GRIP,PARKING BRAKE LEVER (Ref # 46075)	46075-1062	1
JOINT (Ref # 59071)	59071-1106	1
JOINT (Ref # 59071A)	59071-1138	1
NUT,6MM (Ref # 92015)	92015-1410	1
NUT,FLANGED,10MM (Ref # 92015A)	92015-1415	1
WASHER,8.5X16X1.2 (Ref # 92022)	92022-1582	2
WASHER,12X20X3.2 (Ref # 92022A)	92022-1936	1
PIN,8X16 (Ref # 92043)	92043-1013	2
RING-O,23.8MM (Ref # 92055)	92055-1257	2
SPRING,BRAKE PEDAL RETURN (Ref # 92081)	92081-1887	1
SPRING,BRAKE LEVER RETURN (Ref # 92081A)	92081-1922	1

© 2026 Kawasaki Motors Corp., U.S.A.