1994 Bayou 300

PARTS DIAGRAM

Battery Case

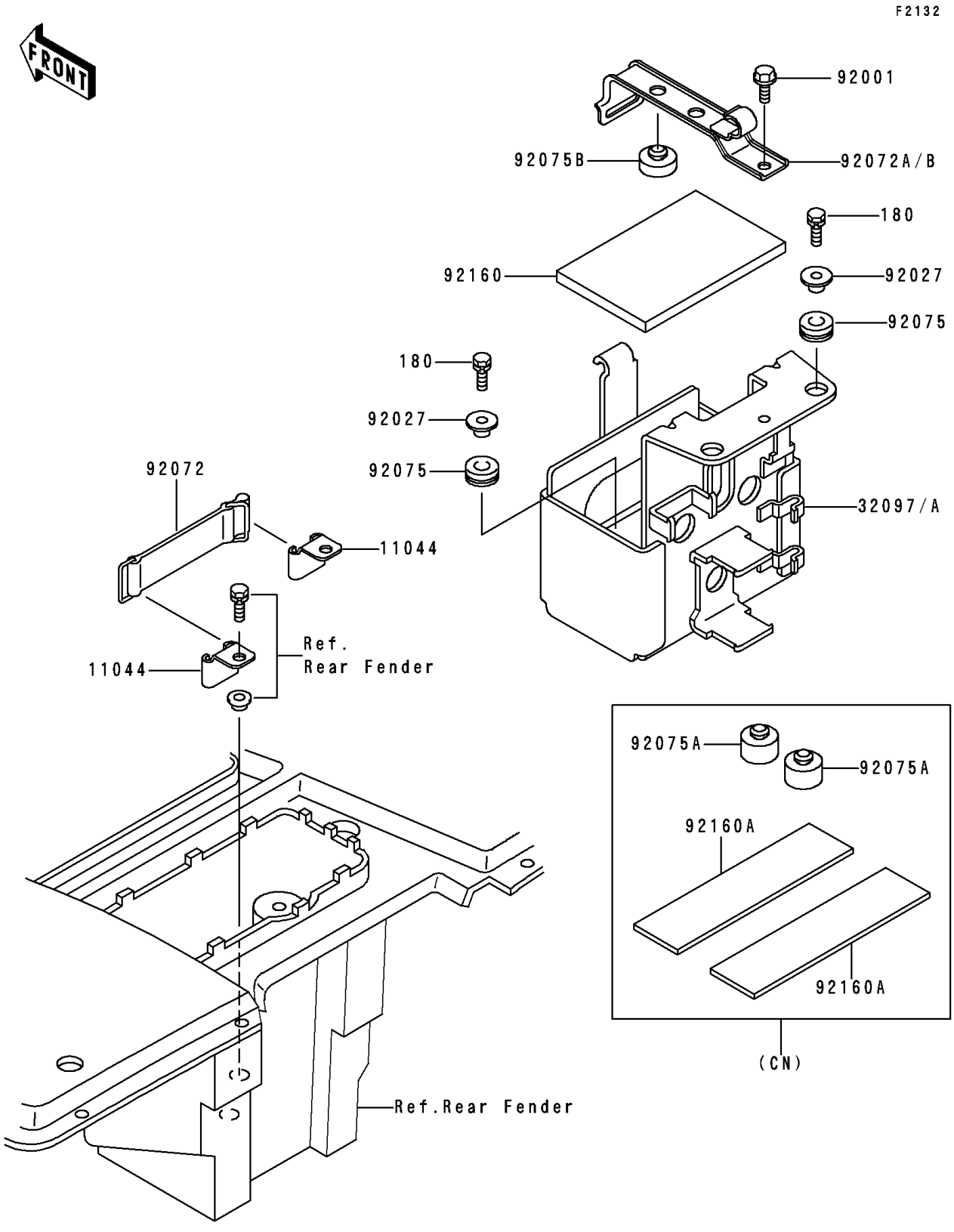

© 2026 Kawasaki Motors Corp., U.S.A.

1994 Bayou 300

PARTS LIST

Battery Case

ITEM NAME	PART NUMBER	QUANTITY
BOLT-UPSET-WS (Ref # 180)	180D0620	4
BRACKET,TOOL (Ref # 11044)	11044-1535	2
BOLT,W/P,6X16 (Ref # 92001)	92001-1860	1
COLLAR,L=9.6 (Ref # 92027)	92027-1045	4
BAND (Ref # 92072)	92072-1044	1
DAMPER (Ref # 92075)	92075-1167	4
CASE-BATTERY (Ref # 32097)	32097-1133	1
CASE-BATTERY (Ref # 32097A)	32097-1144	1
BAND,BATTERY (Ref # 92072A)	92072-1230	1
BAND,BATTERY (Ref # 92072B)	92072-1290	1
DAMPER (Ref # 92075A)	92075-1876	2
DAMPER (Ref # 92075B)	92075-281	2
DAMPER,BATTERY (Ref # 92160)	92160-1100	1
DAMPER (Ref # 92160A)	92160-1266	2

© 2026 Kawasaki Motors Corp., U.S.A.