1994 Bayou 300

PARTS DIAGRAM

Air Cleaner

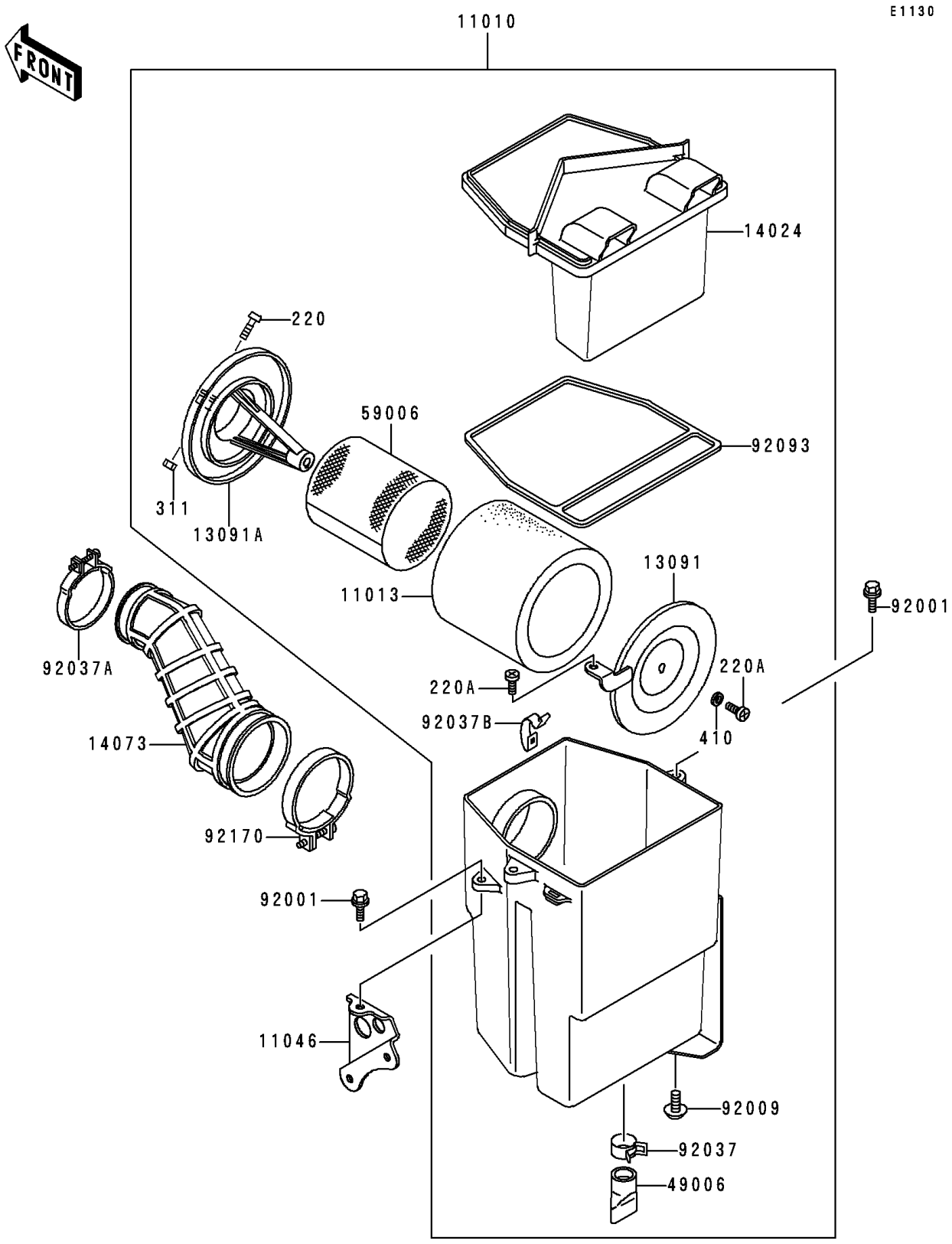

© 2026 Kawasaki Motors Corp., U.S.A.

1994 Bayou 300

PARTS LIST

Air Cleaner

ITEM NAME	PART NUMBER	QUANTITY
SCREW-PAN-CROS (Ref # 220)	220B0516	1
SCREW-PAN-CROS,6X14 (Ref # 220A)	220B0614	2
NUT-HEX (Ref # 311)	311B0500	1
WASHER-PLAIN-SMALL,6MM (Ref # 410)	410B0600	1
FILTER-ASSY-AIR (Ref # 11010)	11010-1365	1
ELEMENT-AIR FILTER (Ref # 11013)	11013-1158	1
BRACKET,REGULATOR (Ref # 11046)	11046-1042	1
HOLDER,ELEMENT (Ref # 13091)	13091-1488	1
HOLDER,AIR FILTER ELEMENT (Ref # 13091A)	13091-1565	1
COVER,AIR FILTER (Ref # 14024)	14024-1703	1
DUCT (Ref # 14073)	14073-1372	1
BOOT (Ref # 49006)	49006-1199	1
ARRESTER-FLAME (Ref # 59006)	59006-1052	1
BOLT,6X18 (Ref # 92001)	92001-1342	3
SCREW,TAPPING,5X10 (Ref # 92009)	92009-1332	2
CLAMP (Ref # 92037)	92037-1460	1
CLAMP (Ref # 92037A)	92037-1523	1
CLAMP,AIR FILTER (Ref # 92037B)	92037-1783	4
SEAL,AIR FILTER (Ref # 92093)	92093-1241	1
CLAMP (Ref # 92170)	92170-1149	1

© 2026 Kawasaki Motors Corp., U.S.A.