1994 Bayou 300

PARTS DIAGRAM

Cylinder/Piston(s)

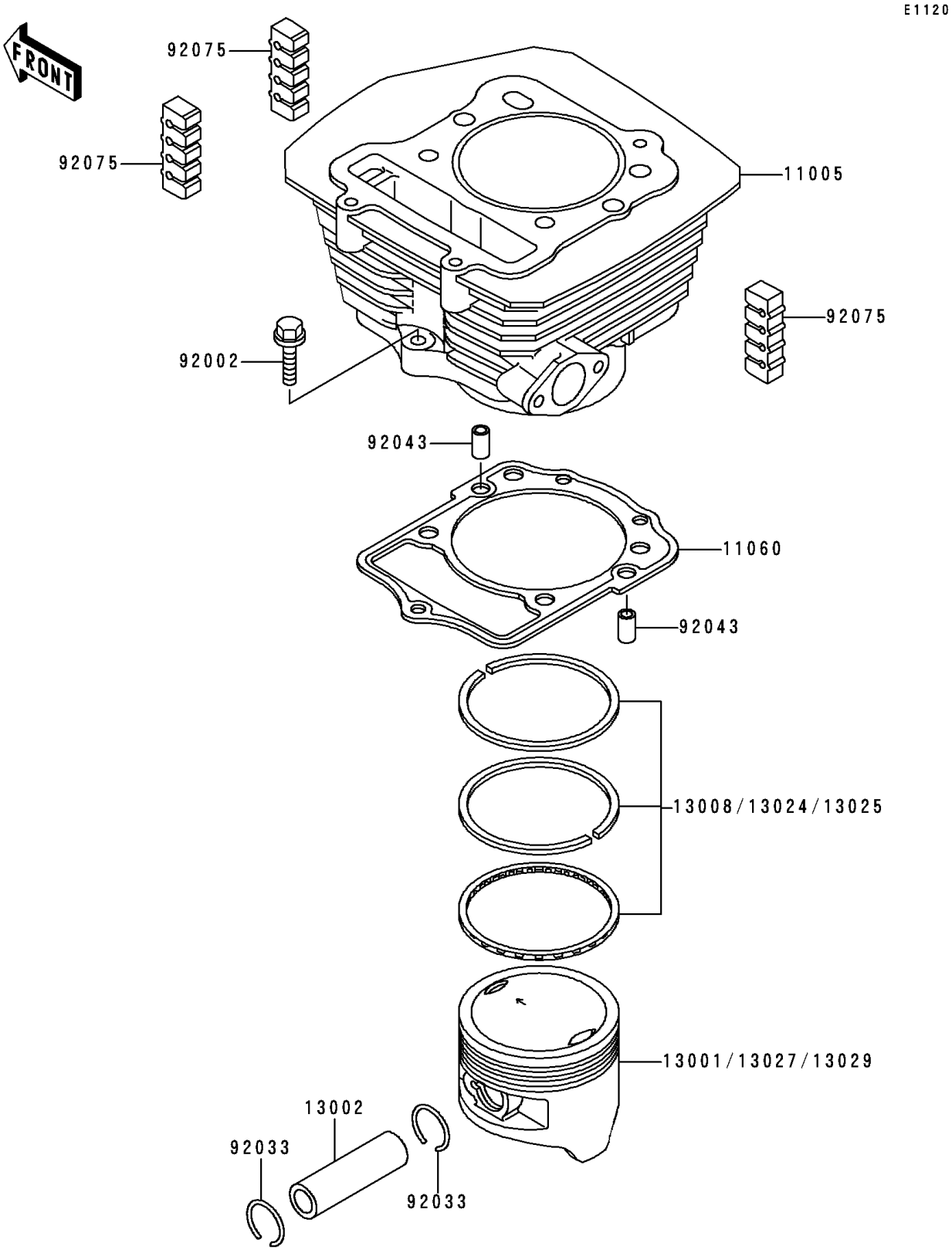

© 2026 Kawasaki Motors Corp., U.S.A.

1994 Bayou 300

PARTS LIST

Cylinder/Piston(s)

ITEM NAME	PART NUMBER	QUANTITY
CYLINDER-ENGINE (Ref # 11005)	11005-1533	1
GASKET,CYLINDER BASE (Ref # 11060)	11060-1652	1
PISTON-ENGINE,STD (Ref # 13001)	13001-1430	1
PIN-PISTON (Ref # 13002)	13002-1059	1
RING-SET-PISTON,STD (Ref # 13008)	13008-1111	1
RING-SET-PISTON LL,O/S 1.00 (Ref # 13024)	13024-1080	1
RING-SET-PISTON L,O/S 0.50 (Ref # 13025)	13025-1093	1
PISTON-ENGINE LL,O/S 1.00 (Ref # 13027)	13027-1178	1
PISTON-ENGINE L,O/S 0.50 (Ref # 13029)	13029-1224	1
BOLT,6X28 (Ref # 92002)	92002-1105	1
RING-SNAP,20.5X1.2 (Ref # 92033)	92033-1099	2
PIN,6.2X8X14 (Ref # 92043)	92043-1263	2
DAMPER (Ref # 92075)	92075-1657	3

© 2026 Kawasaki Motors Corp., U.S.A.