2003 Bayou 300

PARTS DIAGRAM

Recoil Starter

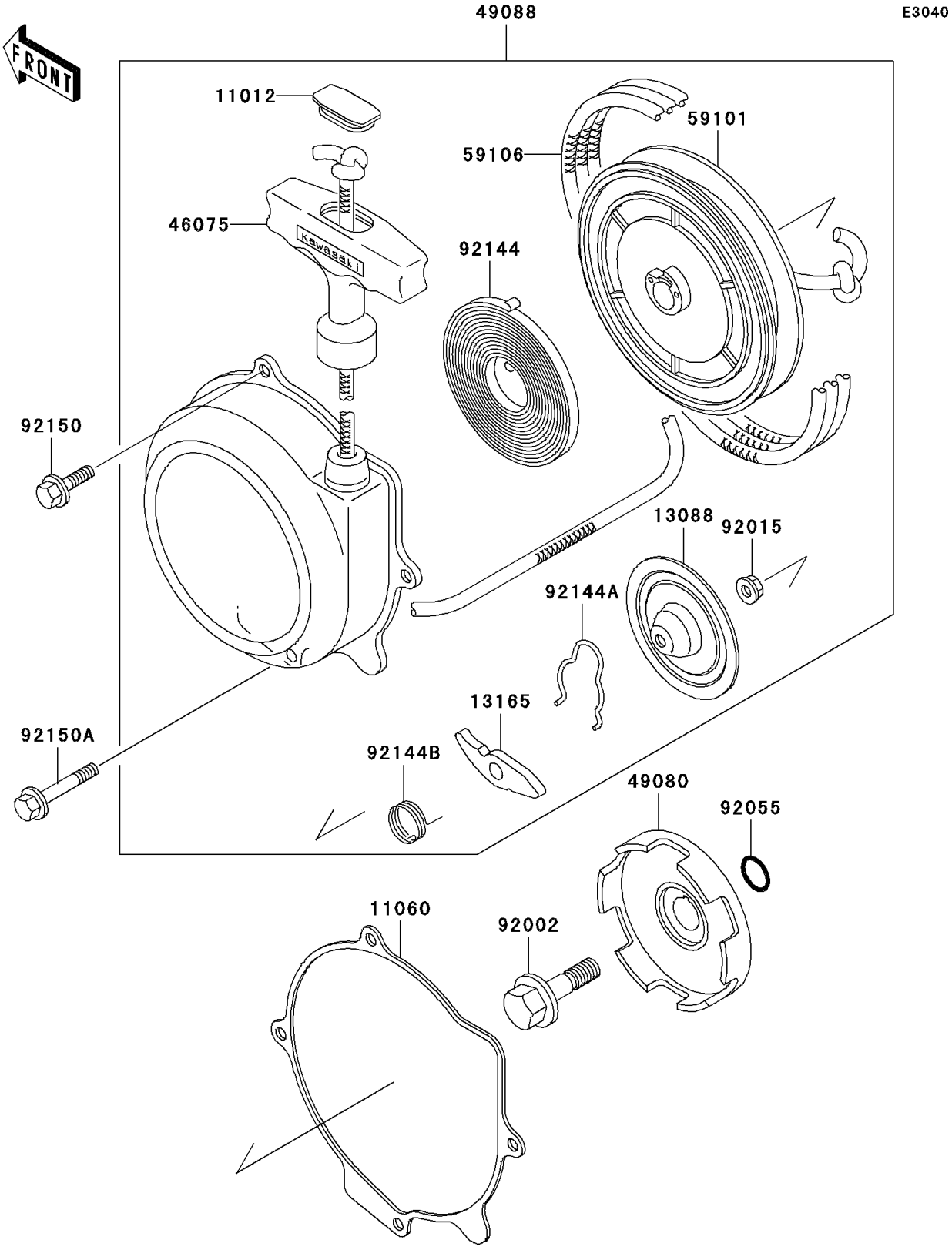

© 2026 Kawasaki Motors Corp., U.S.A.

2003 Bayou 300

PARTS LIST

Recoil Starter

ITEM NAME	PART NUMBER	QUANTITY
CAP,RECOIL GRIP (Ref # 11012)	11012-1420	1
GASKET,RECOIL STARTER (Ref # 11060)	11060-1696	1
PLATE-FRICTION,RECOIL (Ref # 13088)	13088-1073	1
PAWL,RECOIL (Ref # 13165)	13165-1123	1
GRIP,RECOIL (Ref # 46075)	46075-1073	1
PULLEY-STARTING (Ref # 49080)	49080-1055	1
STARTER-RECOIL (Ref # 49088)	49088-1055	1
REEL (Ref # 59101)	59101-1109	1
ROPE (Ref # 59106)	59106-1103	1
BOLT,FLANGED,10X40 (Ref # 92002)	92002-1296	1
NUT,6MM (Ref # 92015)	92015-1464	1
RING-O,16.8MM (Ref # 92055)	92055-1235	1
SPRING,RECOIL (Ref # 92144)	92144-1205	1
SPRING,FRICTION (Ref # 92144A)	92144-1206	1
SPRING,RETURN (Ref # 92144B)	92144-1207	1
BOLT,6X14 (Ref # 92150)	92150-1916	2
BOLT (Ref # 92150A)	92150-1917	2

© 2026 Kawasaki Motors Corp., U.S.A.