2007 Ninja® 500R

PARTS DIAGRAM

Crankcase Bolt Pattern

E1412

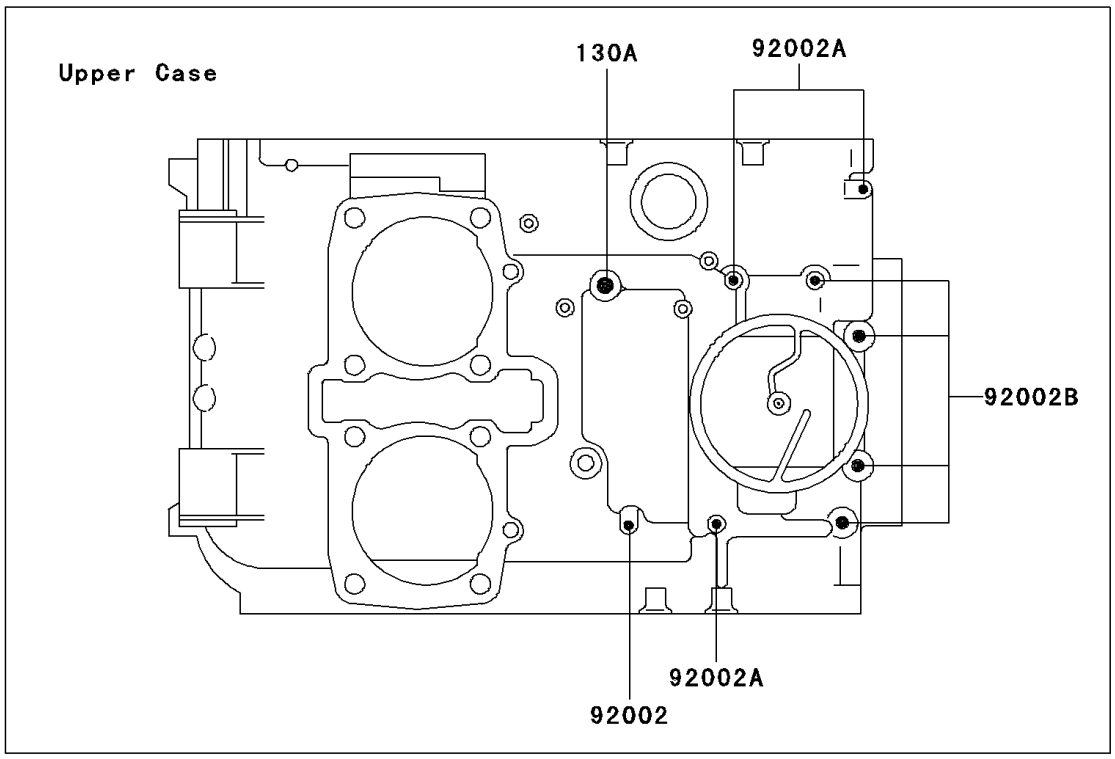

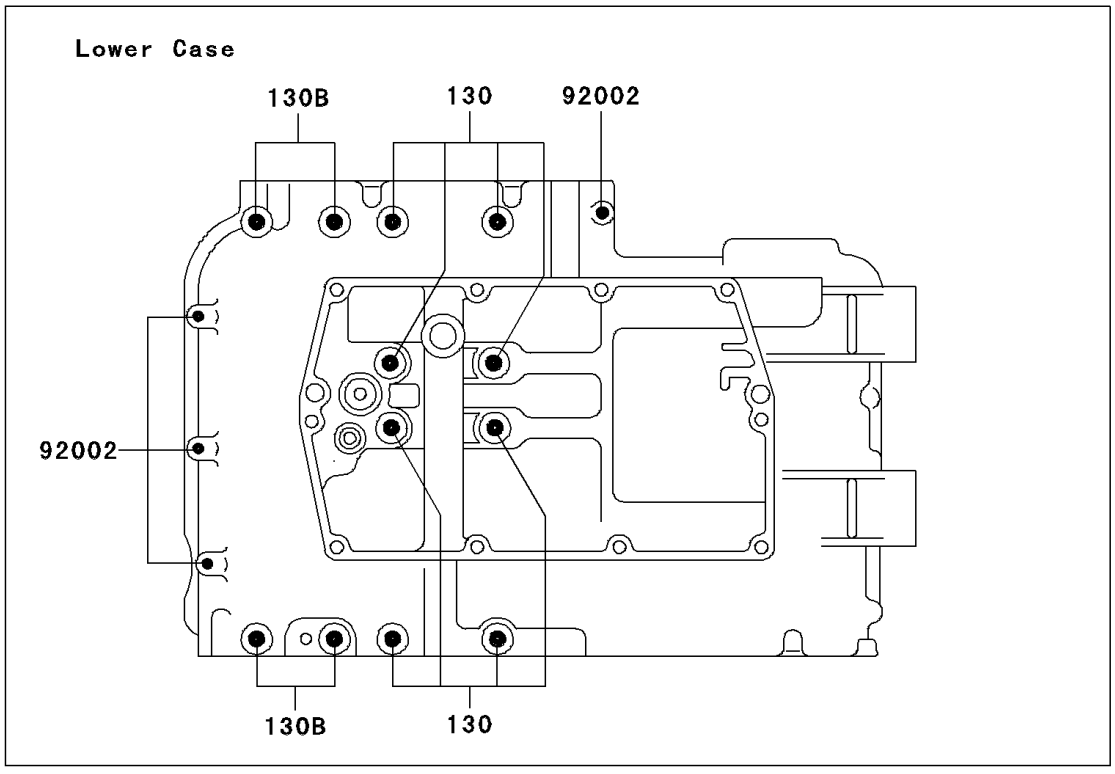

© 2026 Kawasaki Motors Corp., U.S.A.

2007 Ninja® 500R

PARTS LIST

Crankcase Bolt Pattern

ITEM NAME	PART NUMBER	QUANTITY
BOLT-FLANGED,8X100 (Ref # 130)	130CD08100	8
BOLT-FLANGED,8X55 (Ref # 130A)	130CD0855	1
BOLT-FLANGED,8X75 (Ref # 130B)	130CD0875	4
BOLT,FLANGED-SMALL,6X40 (Ref # 92002)	92002-1566	5
BOLT,FLANGED,6X60 (Ref # 92002A)	92002-1567	3
BOLT,FLANGED,6X80 (Ref # 92002B)	92002-1568	4

© 2026 Kawasaki Motors Corp., U.S.A.