1988 Mojave 110E

PARTS DIAGRAM

Side Covers

F2611-0014

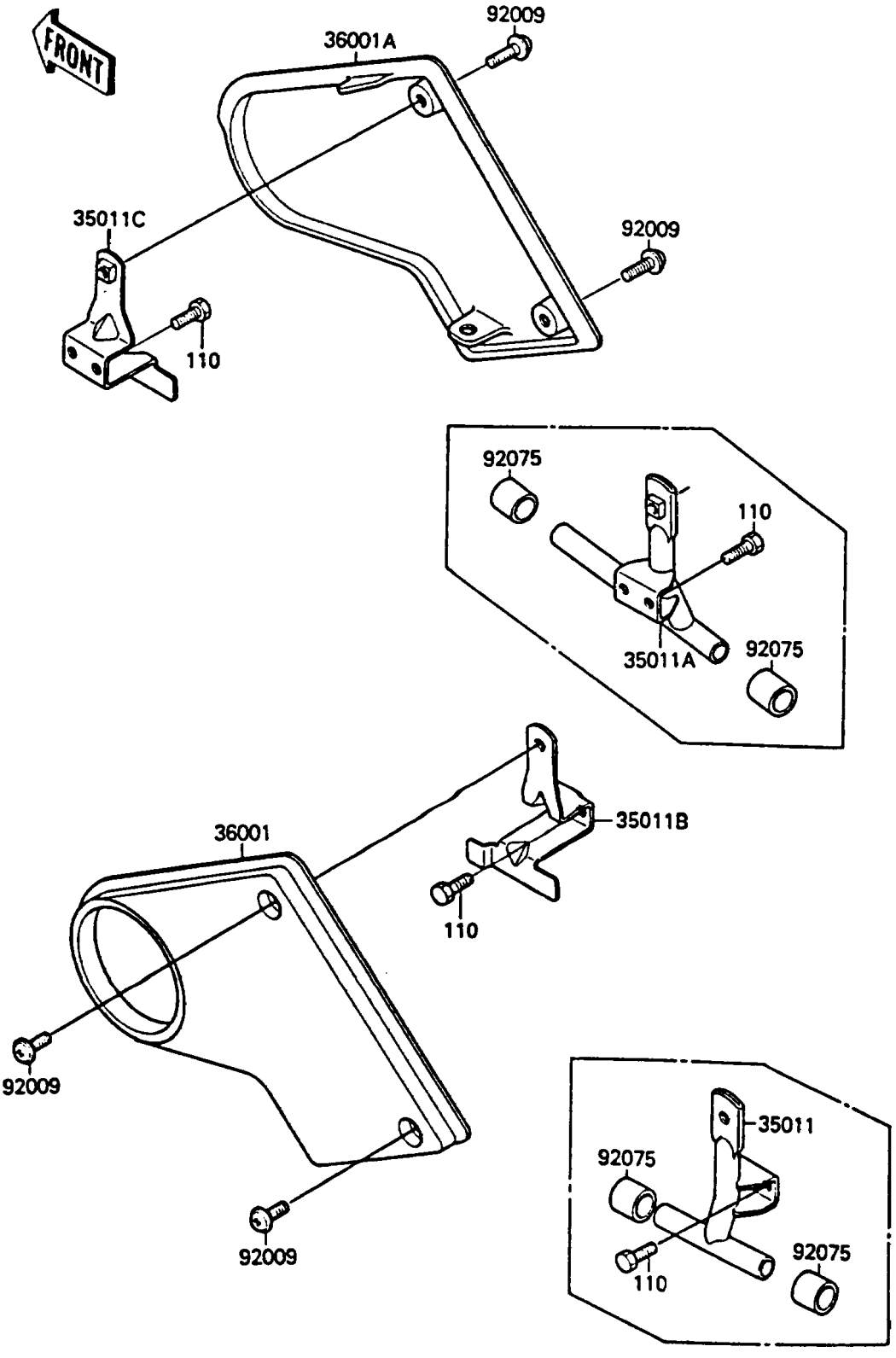

© 2026 Kawasaki Motors Corp., U.S.A.

1988 Mojave 110E

PARTS LIST

Side Covers

ITEM NAME	PART NUMBER	QUANTITY
STAY,SIDE COVER,LH (Ref # 35011B)	35011-1392	1
STAY,SIDE COVER,RH (Ref # 35011C)	35011-1393	1
COVER-SIDE,LH,BLUE (Ref # 36001)	36001-1338-BG	1
COVER-SIDE,RH,BLUE (Ref # 36001A)	36001-1339-BG	1
SCREW,6X14 (Ref # 92009)	92009-1288	4
BOLT,6X10,BLACK (Ref # 110)	110C0610	4

© 2026 Kawasaki Motors Corp., U.S.A.