1987 Mojave 110E

PARTS DIAGRAM

Frame Fittings

F2131-0243

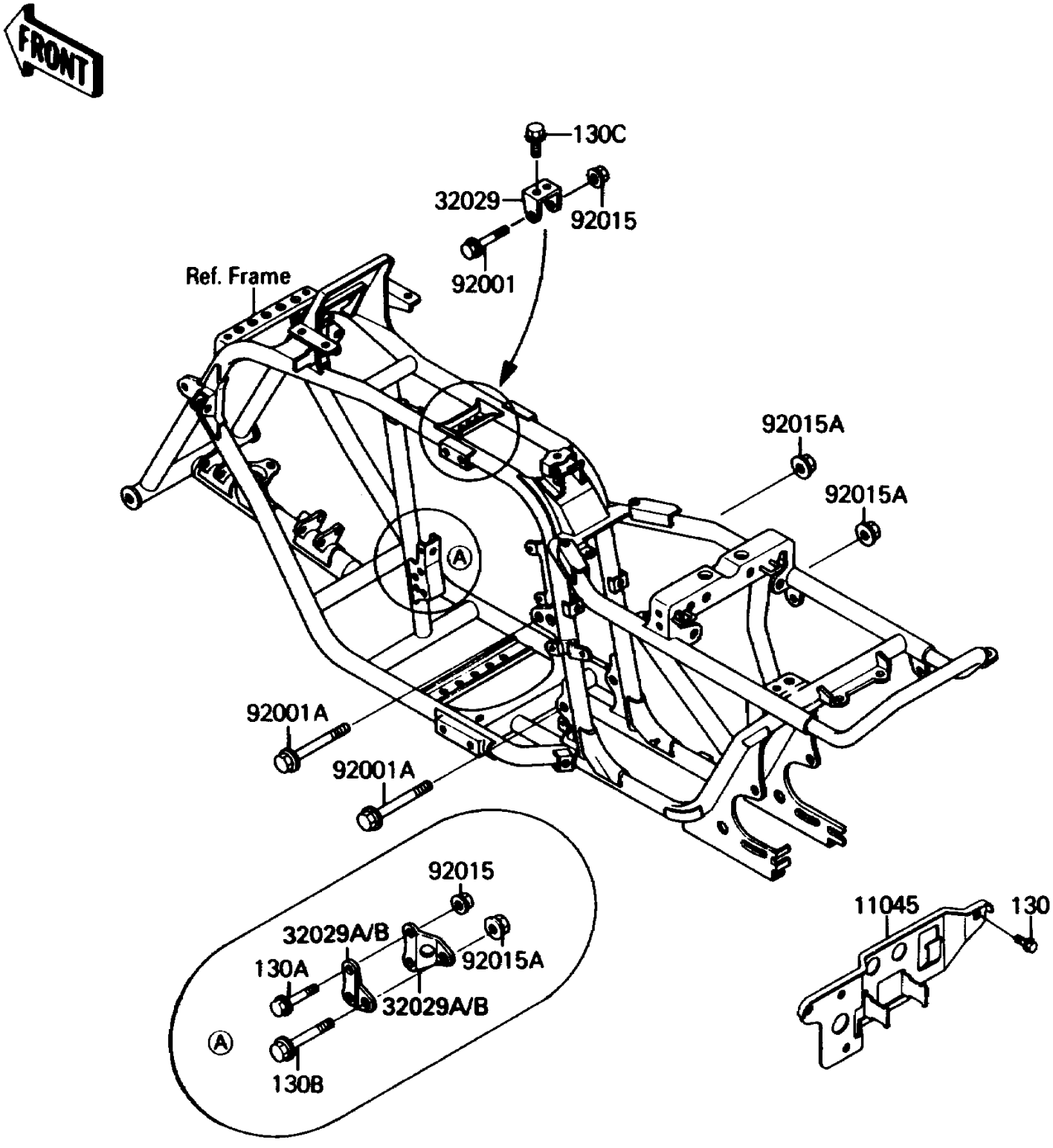

© 2026 Kawasaki Motors Corp., U.S.A.

1987 Mojave 110E

PARTS LIST

Frame Fittings

ITEM NAME	PART NUMBER	QUANTITY
BRACKET,ELECTRIC (Ref # 11045)	11045-1131	1
BRACKET-ENGINE,UPP (Ref # 32029)	32029-1486	1
BRACKET-ENGINE,FR (Ref # 32029A)	32029-1487	2
BOLT,FLANGED,8X55,BLACK (Ref # 92001)	92001-1641	1
BOLT,FLANGED,10X105 (Ref # 92001A)	92001-1651	2
NUT,FLANGED,8MM (Ref # 92015)	92015-1406	3
NUT,FLANGED,10MM (Ref # 92015A)	92015-1415	3
BOLT-FLANGED (Ref # 130)	130D0612	2
BOLT-FLANGED,8X50 (Ref # 130A)	130G0850	2
BOLT-FLANGED (Ref # 130B)	130G1080	1
BOLT-FLANGED (Ref # 130C)	130H0816	2

© 2026 Kawasaki Motors Corp., U.S.A.