1992 KLR650

PARTS DIAGRAM

Stand(s)

Kawasaki
Let the Good Times Roll®

F2190

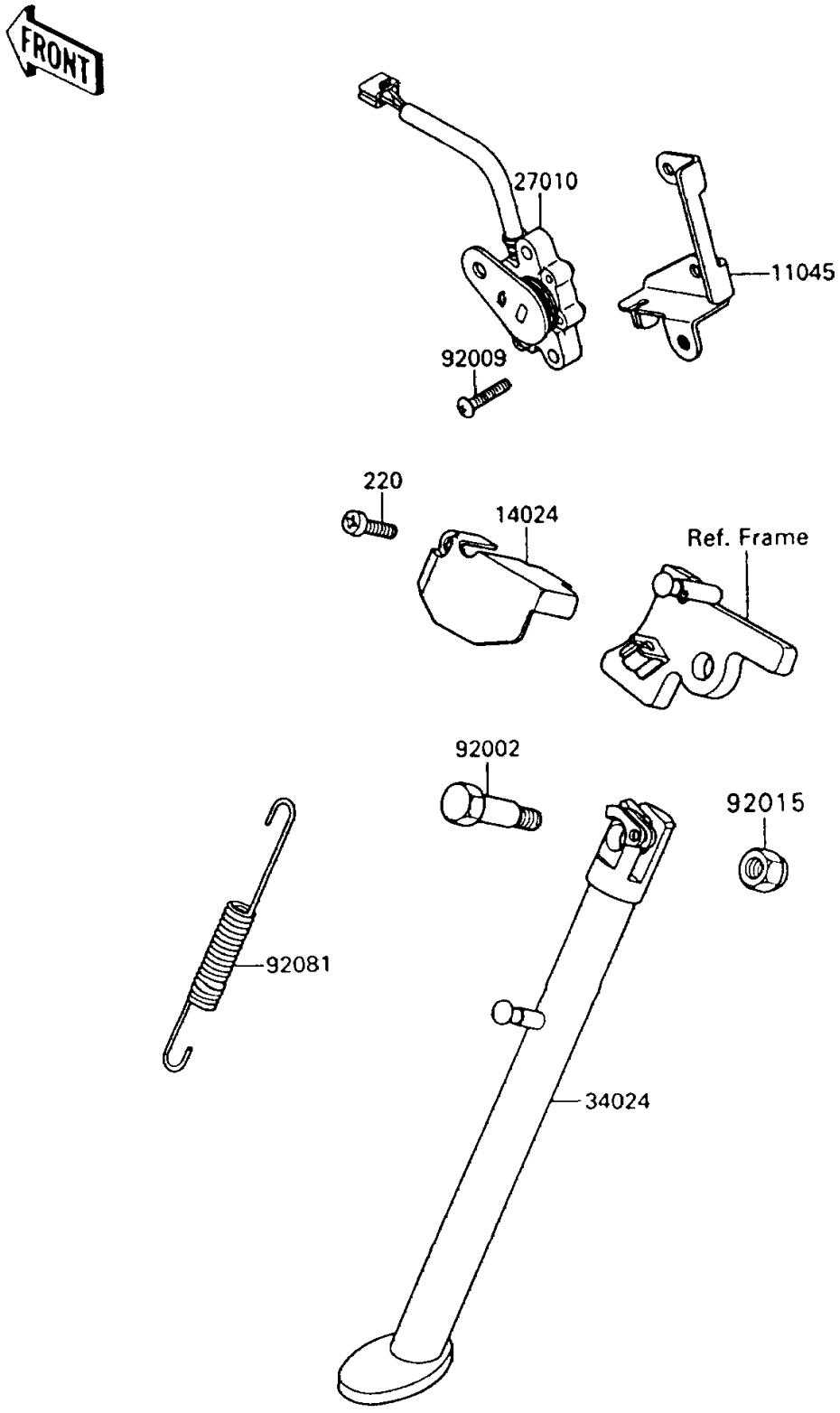

© 2026 Kawasaki Motors Corp., U.S.A.

1992 KLR650

PARTS LIST

Stand(s)

ITEM NAME	PART NUMBER	QUANTITY

© 2026 Kawasaki Motors Corp., U.S.A.