1993 KLR650

PARTS DIAGRAM

Stand(s)

F2190

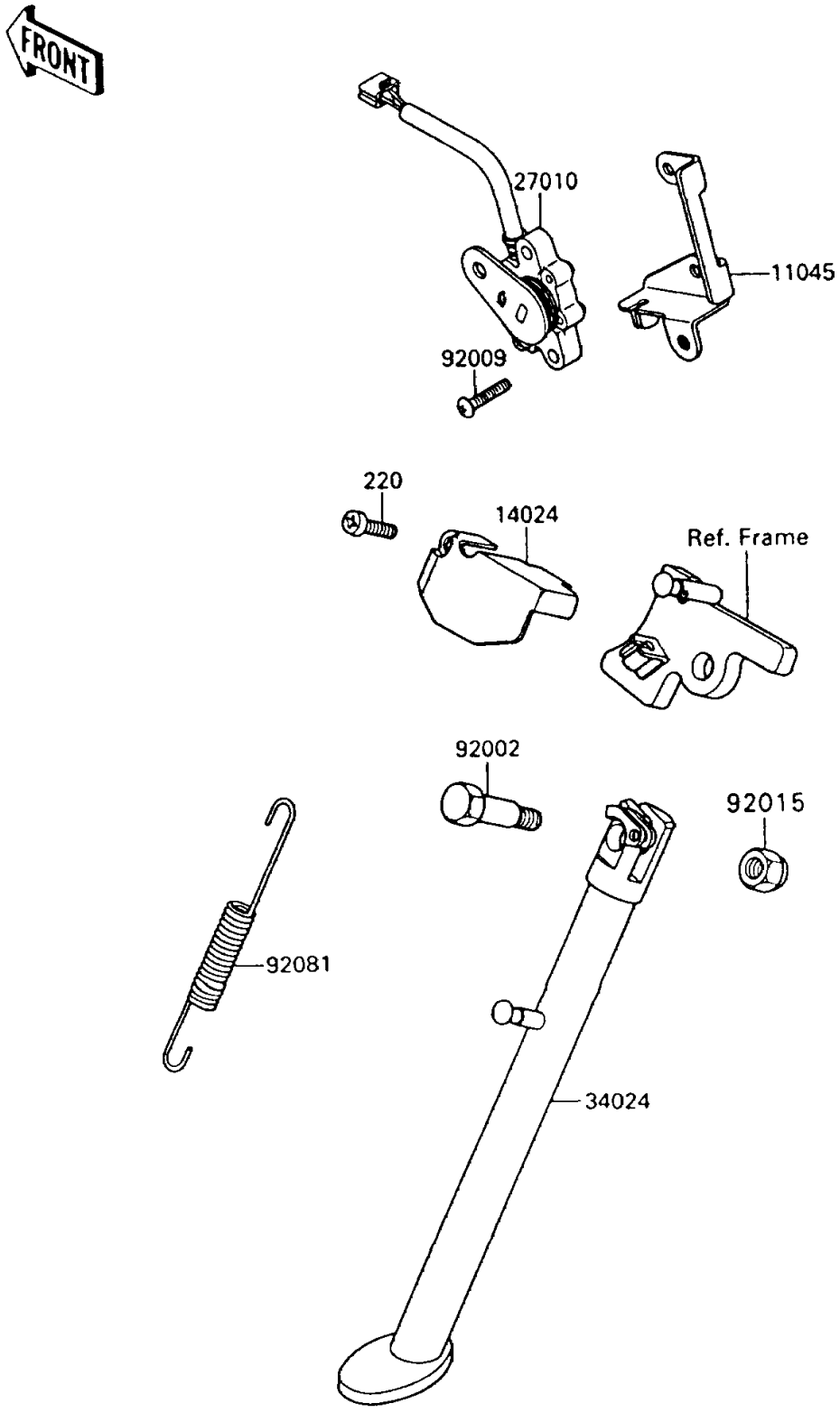

© 2026 Kawasaki Motors Corp., U.S.A.

1993 KLR650

PARTS LIST

Stand(s)

ITEM NAME	PART NUMBER	QUANTITY
BRACKET,SIDE STAND SWITCH (Ref # 11045)	11045-1364	1
COVER,SIDE STAND (Ref # 14024)	14024-1474	1
SWITCH,SIDE STAND (Ref # 27010)	27010-1257	1
STAND-SIDE (Ref # 34024)	34024-1221	1
BOLT,SIDE STAND (Ref # 92002)	92002-1813	1
SCREW,5X25 (Ref # 92009)	92009-1657	2
NUT,LOCK,10MM,BLACK (Ref # 92015)	92015-1188	1
SPRING,SIDE STAND (Ref # 92081)	92081-1376	1
SCREW-PAN-CROS (Ref # 220)	220C0516	1

© 2026 Kawasaki Motors Corp., U.S.A.