1992 KLR650

PARTS DIAGRAM

Rear Suspension

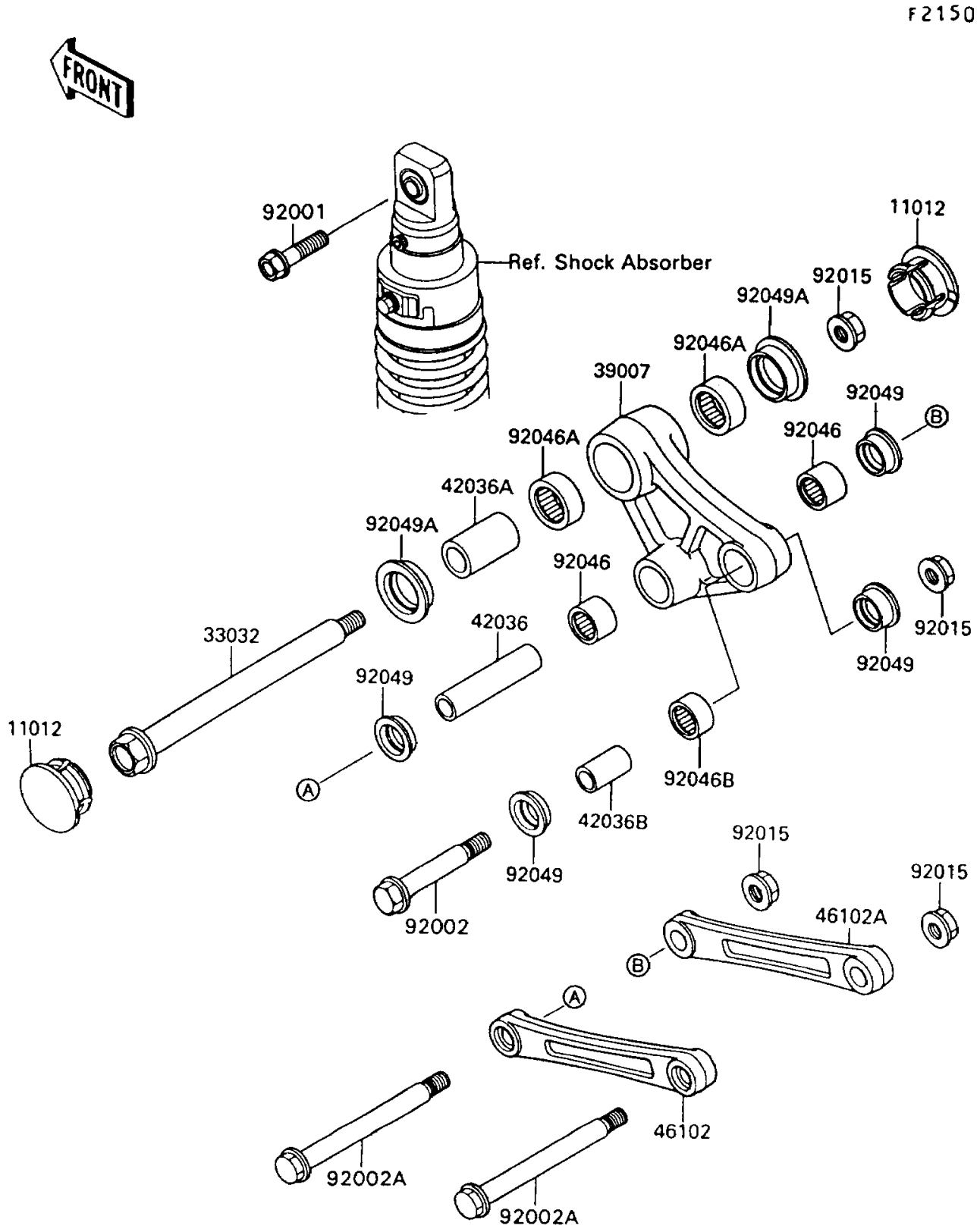

© 2026 Kawasaki Motors Corp., U.S.A.

1992 KLR650

PARTS LIST

Rear Suspension

ITEM NAME	PART NUMBER	QUANTITY

© 2026 Kawasaki Motors Corp., U.S.A.