1993 KLR650

PARTS DIAGRAM

Ignition System

E1830

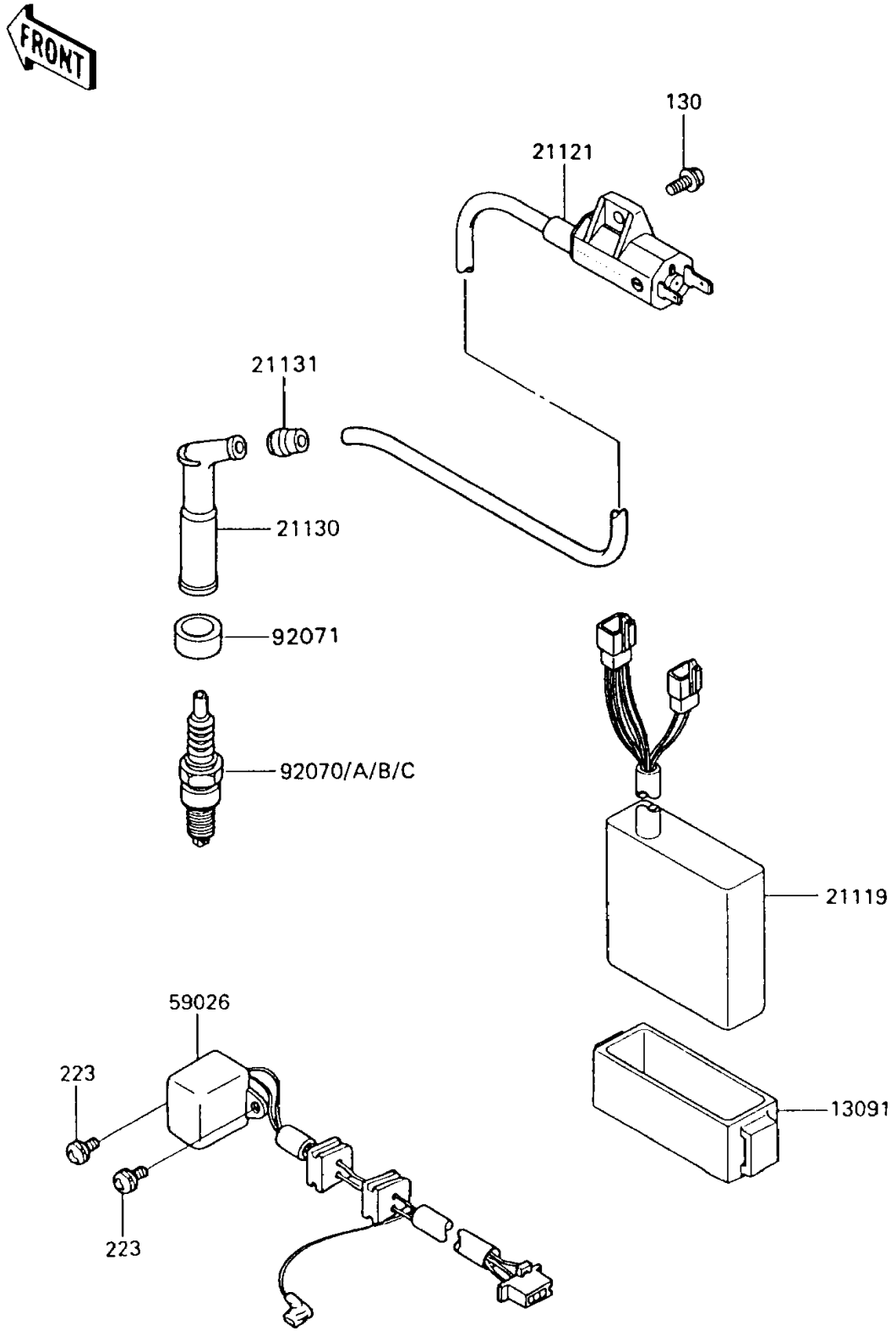

© 2026 Kawasaki Motors Corp., U.S.A.

1993 KLR650

PARTS LIST

Ignition System

ITEM NAME	PART NUMBER	QUANTITY
HOLDER,IGNITER (Ref # 13091)	13091-1271	1
IGNITER (Ref # 21119)	21119-1272	1
COIL-IGNITION (Ref # 21121)	21121-1152	1
CAP-SPARK PLUG (Ref # 21130)	21130-1002	1
GROMMET,HIGH TENSION (Ref # 21131)	21131-005	1
COIL-PULSING (Ref # 59026)	59026-1087	1
PLUG-SPARK,DPR8EA-9(NGK) (Ref # 92070)	92070-1065	1
PLUG-SPARK,DP8EA-9(NGK) (Ref # 92070A)	92070-1066	1
PLUG-SPARK,X24EPR-U9(ND) (Ref # 92070B)		1
PLUG-SPARK,X24EP-U9(ND) (Ref # 92070C)		1
GROMMET,PLUG CAP (Ref # 92071)	92071-1124	1
BOLT-FLANGED,6X12 (Ref # 130)	130G0612	1
SCREW-PAN-WS-CROS (Ref # 223)	223B0514	2

© 2026 Kawasaki Motors Corp., U.S.A.