1993 KLR650

PARTS DIAGRAM

Gear Change Mechanism

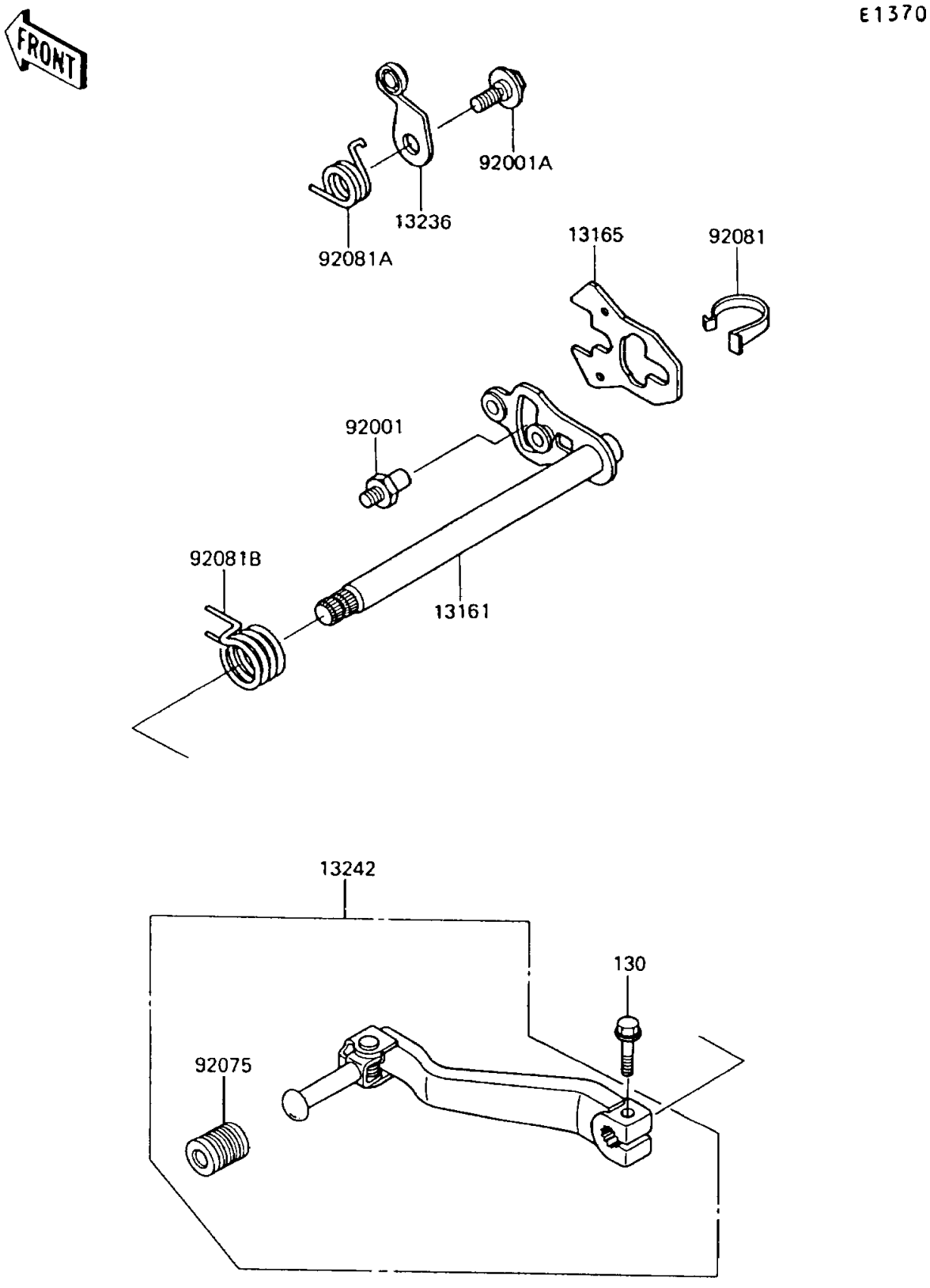

© 2026 Kawasaki Motors Corp., U.S.A.

1993 KLR650

PARTS LIST

Gear Change Mechanism

ITEM NAME	PART NUMBER	QUANTITY
LEVER-COMP-CHANGE SHAFT (Ref # 13161)	13161-1104	1
PAWL (Ref # 13165)	13165-1120	1
LEVER-COMP (Ref # 13236)	13236-1101	1
LEVER-ASSY-CHANGE,PEDAL (Ref # 13242)	13242-1233	1
BOLT,RETURN SPRING (Ref # 92001)	92001-1455	1
BOLT,GEAR CHANGE LEVER (Ref # 92001A)	92001-1715	1
DAMPER,CHANGE PEDAL (Ref # 92075)	92075-1944	1
SPRING,CHANGE LEVER (Ref # 92081)	92081-1493	1
SPRING (Ref # 92081A)	92081-1496	1
SPRING,CHANGE PEDAL RETURN (Ref # 92081B)	92081-1750	1
BOLT-FLANGED,6X20,BLACK (Ref # 130)	130S0620	1

© 2026 Kawasaki Motors Corp., U.S.A.