# 2000 Super Sherpa

## PARTS DIAGRAM

### Headlight(s)

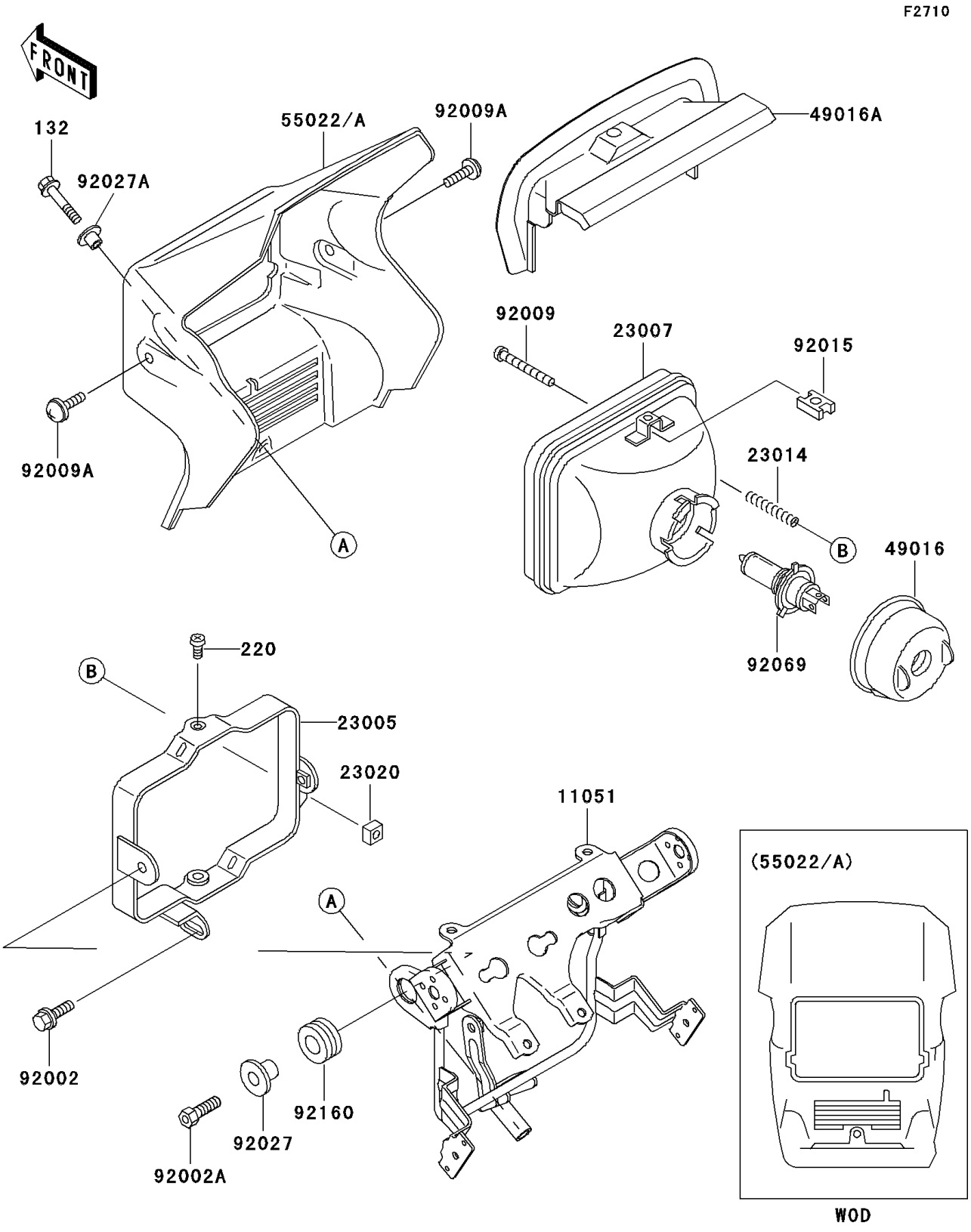


© 2026 Kawasaki Motors Corp., U.S.A.

# 2000 Super Sherpa

## PARTS LIST

### Headlight(s)

| ITEM NAME | PART NUMBER | QUANTITY |
|---|---|---|
| BOLT-FLANGED-SMALL (Ref # 132) | 132E0645 | 1 |
| SCREW-PAN-CROS,5X8 (Ref # 220) | 220B0508 | 2 |
| BRACKET,HEAD LAMP (Ref # 11051) | 11051-1320 | 1 |
| BODY-COMP-HEAD LAMP (Ref # 23005) | 23005-1052 | 1 |
| LENS-COMP,HEAD LAMP (Ref # 23007) | 23007-1364 | 1 |
| SPRING,FOCUS ADJUSTING (Ref # 23014) | 23014-005 | 1 |
| NUT,4MM,FOCUS ADJUST (Ref # 23020) | 23020-018 | 1 |
| COVER-SEAL,SOCKET (Ref # 49016) | 49016-1037 | 1 |
| COVER-SEAL,HEAD LAMP (Ref # 49016A) | 49016-1204 | 1 |
| COVER-HEAD LAMP,O.GREEN (Ref # 55022A) | 55022-1085-68 | 1 |
| BOLT,6X16 (Ref # 92002) | 92002-1124 | 1 |
| BOLT (Ref # 92002A) | 92002-1319 | 2 |
| SCREW,4X48 (Ref # 92009) | 92009-1065 | 1 |
| SCREW,6X8 (Ref # 92009A) | 92009-1294 | 2 |
| NUT,5MM (Ref # 92015) | 92015-1354 | 2 |
| COLLAR,L=14 (Ref # 92027) | 92027-1134 | 2 |
| COLLAR,L=4.6 (Ref # 92027A) | 92027-1168 | 1 |
| BULB,12V 60/55W,H4 (Ref # 92069) | 92069-1002 | 1 |
| DAMPER (Ref # 92160) | 92160-1007 | 2 |

© 2026 Kawasaki Motors Corp., U.S.A.