2004 Super Sherpa (Canada Only)

PARTS DIAGRAM

Stand(s)

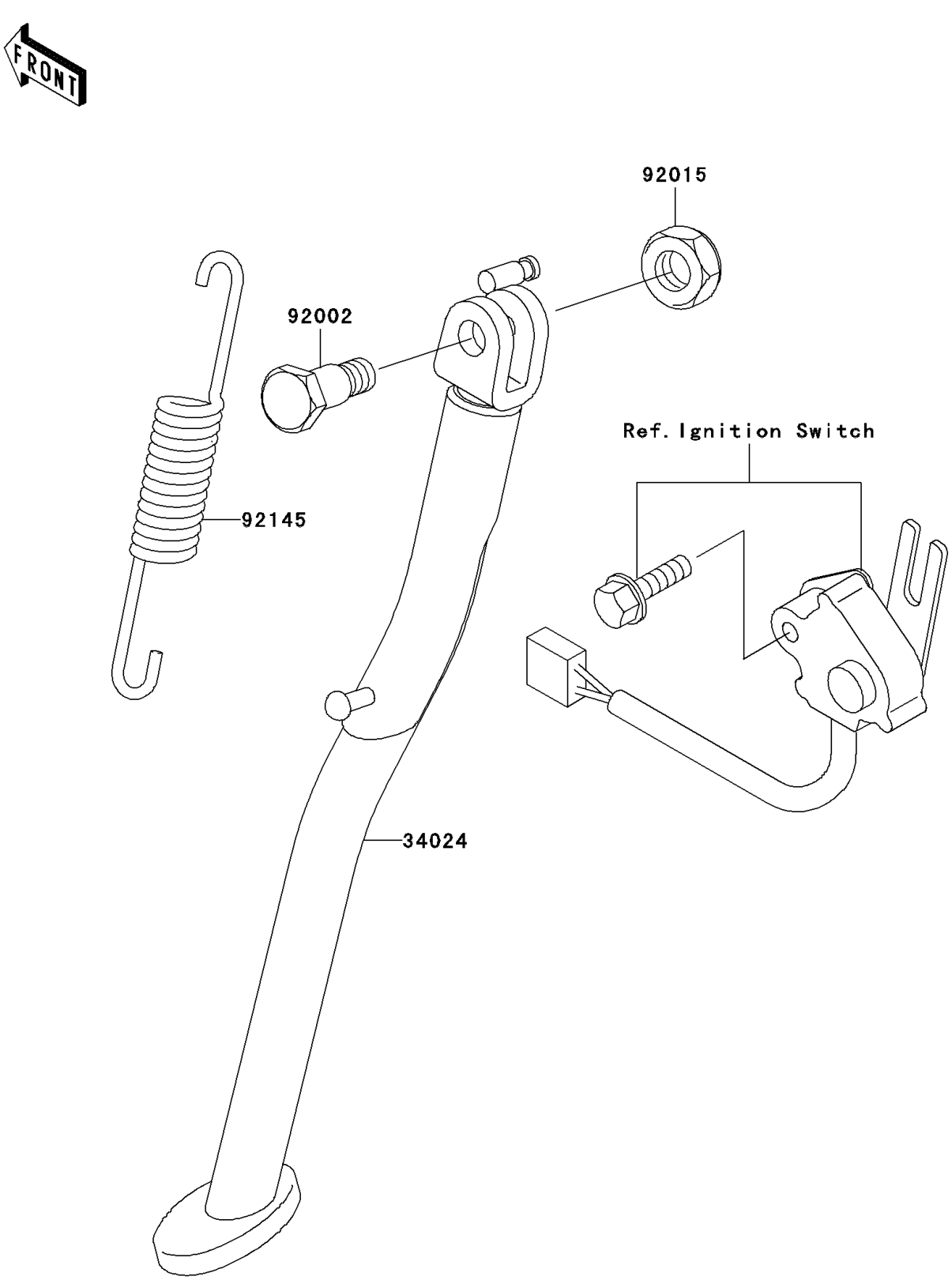

© 2026 Kawasaki Motors Corp., U.S.A.

2004 Super Sherpa (Canada Only)

PARTS LIST

Stand(s)

ITEM NAME	PART NUMBER	QUANTITY
STAND-SIDE (Ref # 34024)	34024-1337	1
BOLT,SIDE STAND (Ref # 92002)	92002-1813	1
NUT,LOCK,10MM,BLACK (Ref # 92015)	92015-1188	1
SPRING,SIDE STAND (Ref # 92145)	92145-0116	1

© 2026 Kawasaki Motors Corp., U.S.A.