2004 Super Sherpa (Canada Only)

PARTS DIAGRAM

Frame Fittings

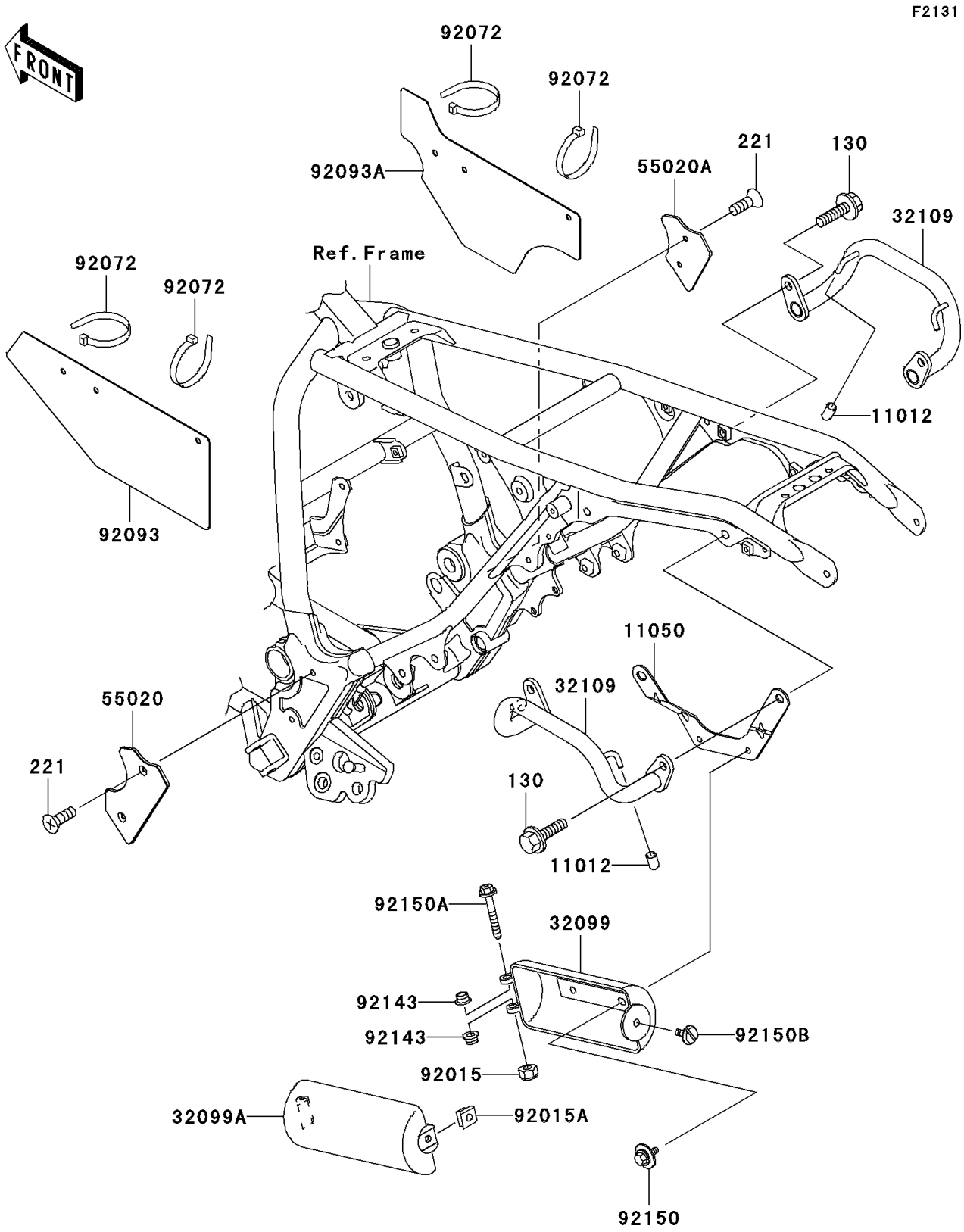

© 2026 Kawasaki Motors Corp., U.S.A.

2004 Super Sherpa (Canada Only)

PARTS LIST

Frame Fittings

ITEM NAME	PART NUMBER	QUANTITY
BOLT-FLANGED,8X16 (Ref # 130)	130G0816	4
SCREW-CSK-CROSS,5X12 (Ref # 221)	221B0512	4
CAP,BUNGEE CORD HOOK (Ref # 11012)	11012-1589	4
BRACKET,TOOL CASE,C.GRAY (Ref # 11050)	11050-1445-EZ	1
CASE,TOOL,BODY (Ref # 32099)	32099-1184	1
CASE,TOOL,CAP (Ref # 32099A)	32099-1185	1
GRIP-FRAME,C.GRAY (Ref # 32109)	32109-1260-EZ	2
GUARD,FOOT,LH (Ref # 55020)	55020-1606	1
GUARD,FOOT,RH (Ref # 55020A)	55020-1607	1
NUT,LOCK,5MM (Ref # 92015)	92015-1221	1
NUT,6MM (Ref # 92015A)	92015-1602	1
BAND,L=202 (Ref # 92072)	92072-1195	4
SEAL,AIR CLEANER,LH (Ref # 92093)	92093-1450	1
SEAL,AIR CLEANER,RH (Ref # 92093A)	92093-1451	1
COLLAR (Ref # 92143)	92143-1234	2
BOLT,6X14 (Ref # 92150)	92150-1392	2
BOLT,ADJUST,5X45 (Ref # 92150A)	92150-1590	1
BOLT,6X14 (Ref # 92150B)	92150-3732	1

© 2026 Kawasaki Motors Corp., U.S.A.