2000 Super Sherpa

PARTS DIAGRAM

Engine Mount

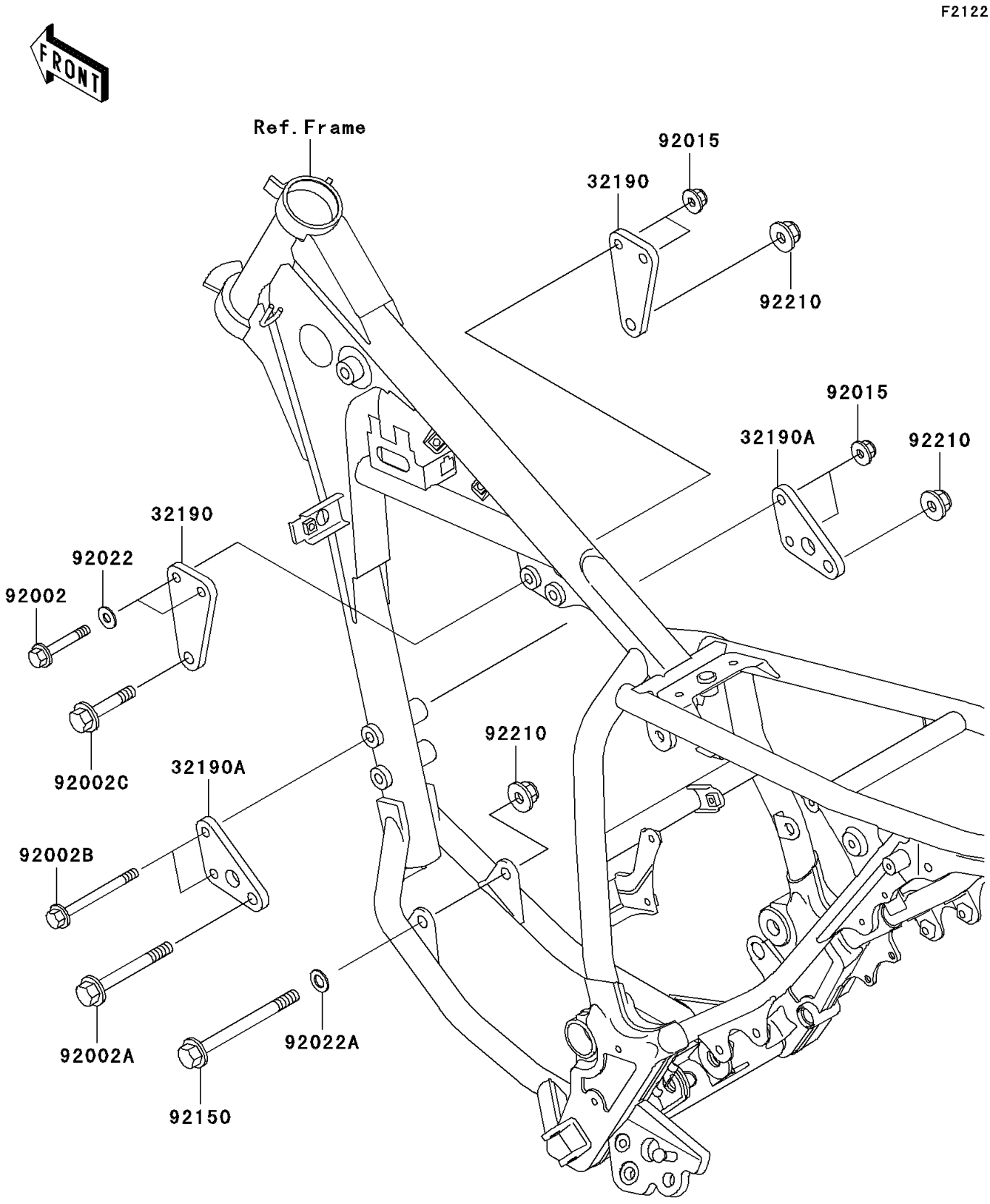

© 2026 Kawasaki Motors Corp., U.S.A.

2000 Super Sherpa

PARTS LIST

Engine Mount

ITEM NAME	PART NUMBER	QUANTITY
BRACKET-ENGINE,HEAD (Ref # 32190)	32190-1099	2
BRACKET-ENGINE,FR (Ref # 32190A)	32190-1100	2
BOLT (Ref # 92002)	92002-1221	2
BOLT,10X90 (Ref # 92002A)	92002-1674	1
BOLT,FLANGED,8X90 (Ref # 92002B)	92002-1849	2
BOLT,FLANGED,10X53 (Ref # 92002C)	92002-1936	1
NUT,8MM (Ref # 92015)	92015-1432	4
WASHER,8.5X20X1.6 (Ref # 92022)	92022-1561	2
WASHER,11.5X20.5X1.6 (Ref # 92022A)	92022-1768	1
BOLT,FLANGED,10X120 (Ref # 92150)	92150-1642	1
NUT,LOCK,FLANGED,10MM (Ref # 92210)	92210-1080	3

© 2026 Kawasaki Motors Corp., U.S.A.