2000 Super Sherpa

PARTS DIAGRAM

Cylinder Head Cover

E1112

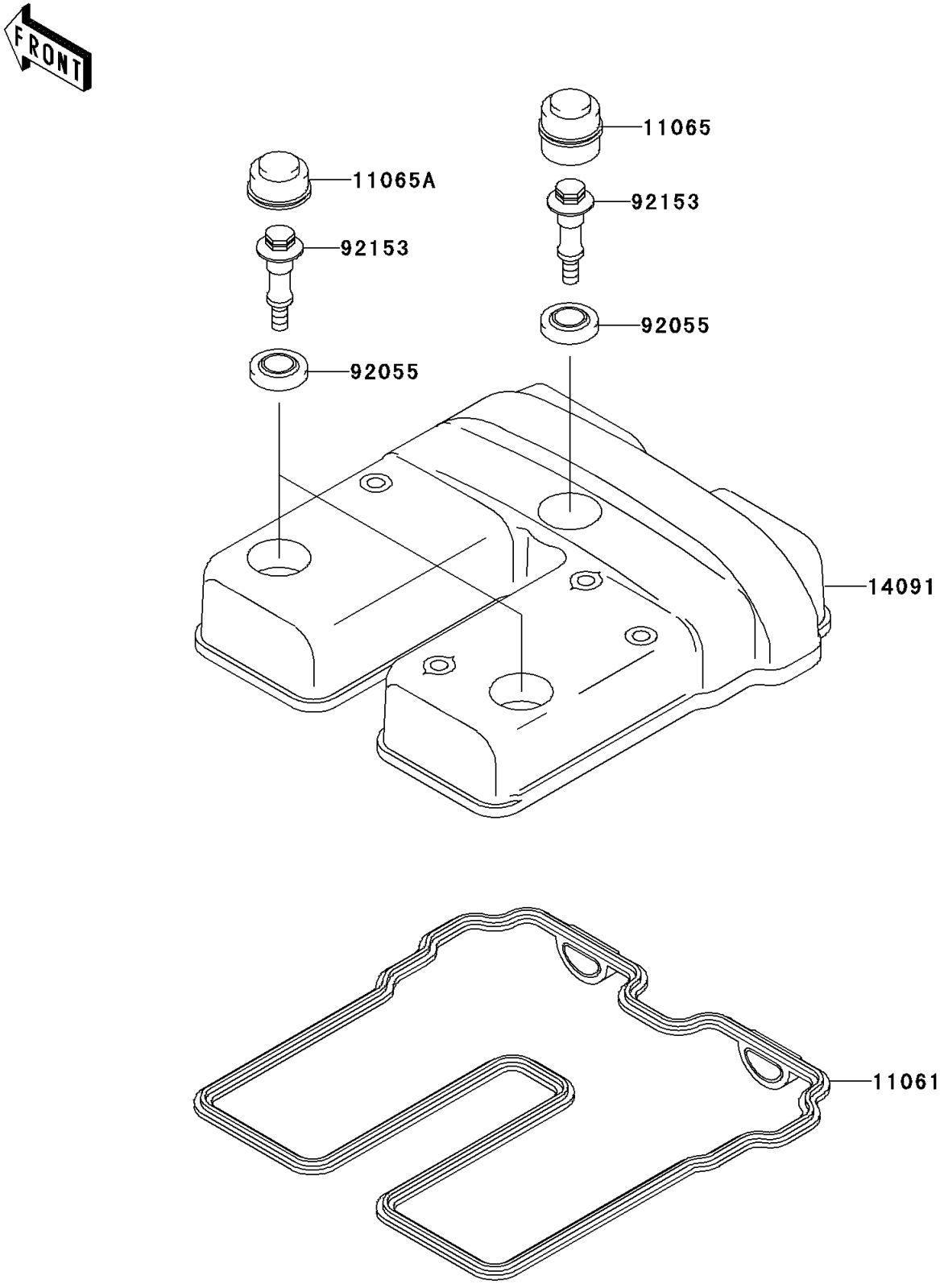

© 2026 Kawasaki Motors Corp., U.S.A.

2000 Super Sherpa

PARTS LIST

Cylinder Head Cover

ITEM NAME	PART NUMBER	QUANTITY
GASKET,HEAD COVER (Ref # 11061)	11061-0044	1
CAP (Ref # 11065)	11065-1078	1
CAP (Ref # 11065A)	11065-1079	2
COVER,HEAD (Ref # 14091)	14091-1223	1
RING-O (Ref # 92055)	92055-0143	3
BOLT (Ref # 92153)	92153-0431	3

© 2026 Kawasaki Motors Corp., U.S.A.