1990 KLR250

PARTS DIAGRAM

Head Lamp

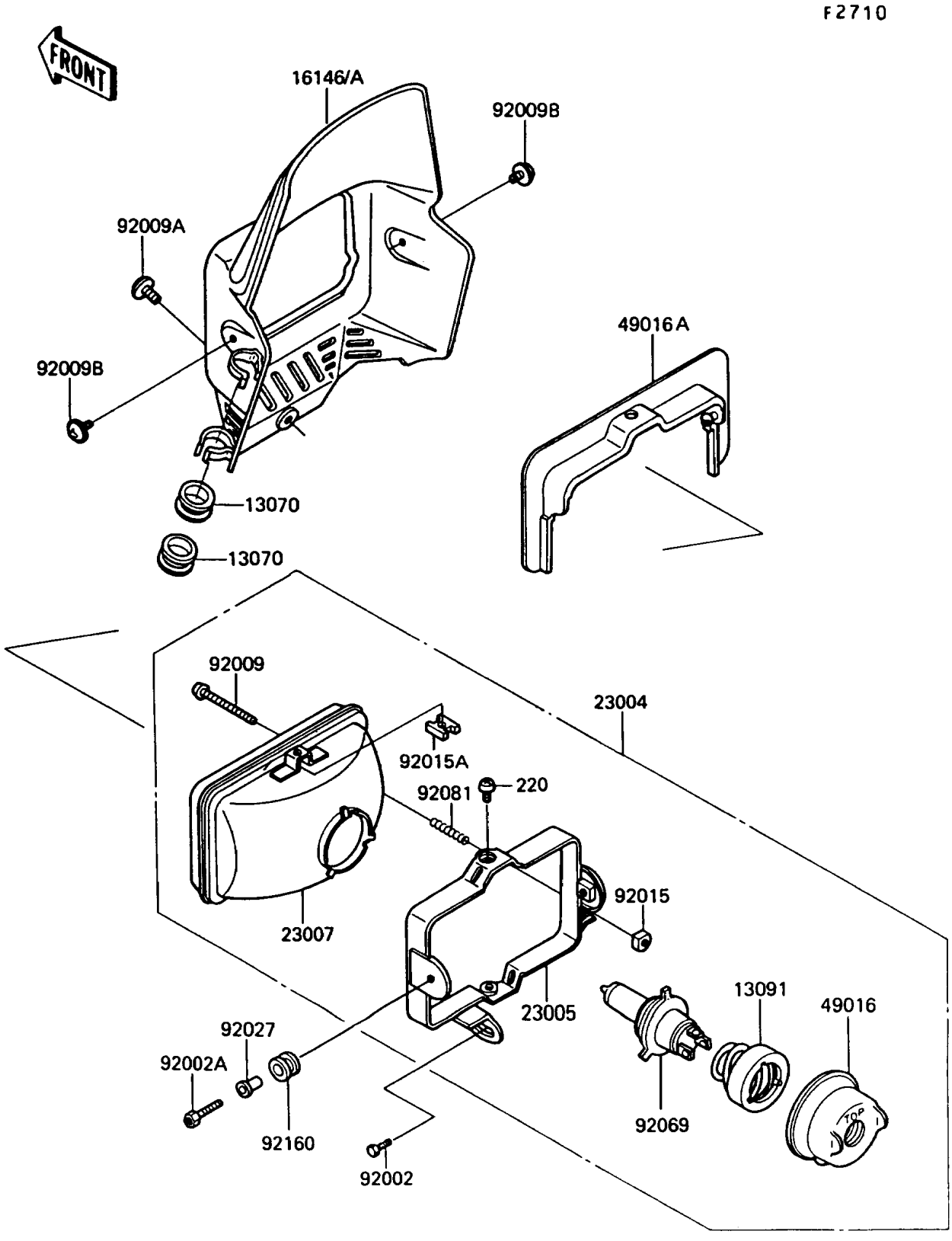

© 2026 Kawasaki Motors Corp., U.S.A.

1990 KLR250

PARTS LIST

Head Lamp

ITEM NAME	PART NUMBER	QUANTITY
GUIDE,BRAKE HOSE (Ref # 13070)	13070-1107	2
HOLDER,SOCKET (Ref # 13091)	13091-1558	1
COVER-ASSY,HEAD LAMP,B.BLUE (Ref # 16146)	16146-5024-6K	1
LAMP-HEAD (Ref # 23004)	23004-1156	1
BODY-COMP-HEAD LAMP (Ref # 23005)	23005-1052	1
LENS-COMP,HEAD LAMP (Ref # 23007)	23007-1102	1
COVER-SEAL,SOCKET (Ref # 49016)	49016-1037	1
COVER-SEAL,HEAD LAMP (Ref # 49016A)	49016-1101	1
BOLT,6X14 (Ref # 92002)	92002-1260	1
BOLT (Ref # 92002A)	92002-1319	2
SCREW,4MM (Ref # 92009)	92009-1065	1
SCREW,6X14,WHITE (Ref # 92009A)	92009-1287	1
SCREW,6X8 (Ref # 92009B)	92009-1294	2
NUT,4MM,FOCUS ADJUST (Ref # 92015)	23020-018	1
NUT,5MM (Ref # 92015A)	92015-1354	2
COLLAR,L=14 (Ref # 92027)	92027-1134	2
BULB,12V 60/55W,H4 (Ref # 92069)	92069-1002	1
SPRING,FOCUS ADJUSTING (Ref # 92081)	23014-005	1
DAMPER (Ref # 92160)	92160-1007	2
SCREW-PAN-CROS,5X8 (Ref # 220)	220B0508	2

© 2026 Kawasaki Motors Corp., U.S.A.