2013 TERYX® 750 FI 4x4 SPORT

PARTS DIAGRAM

Reflectors(CN)

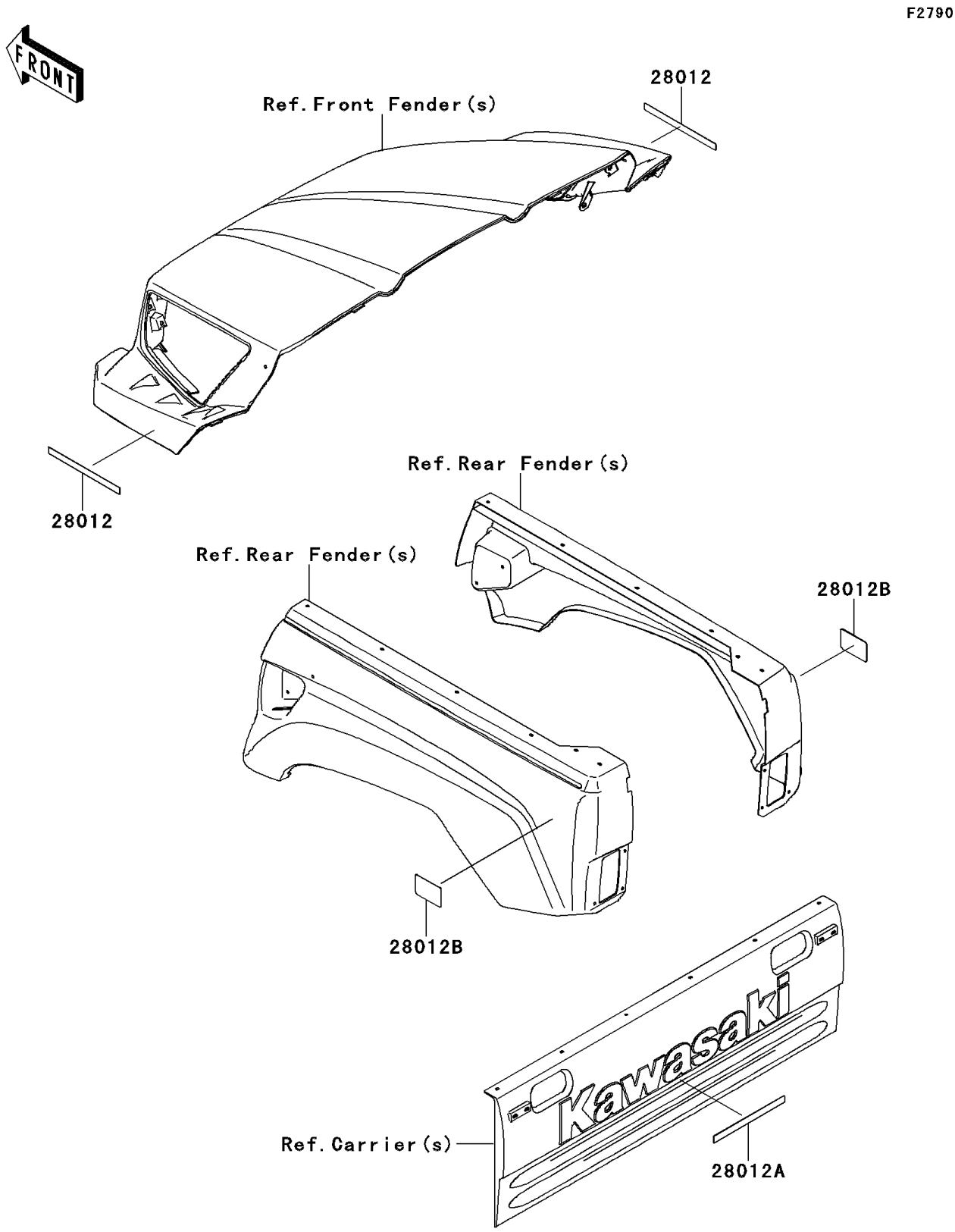

© 2026 Kawasaki Motors Corp., U.S.A.

2013 TERYX® 750 FI 4x4 SPORT

PARTS LIST

Reflectors(CN)

ITEM NAME	PART NUMBER	QUANTITY

© 2026 Kawasaki Motors Corp., U.S.A.