2013 TERYX® 750 FI 4x4 SPORT

PARTS DIAGRAM

Front Hubs/Brakes

Kawasaki
Let the Good Times Roll®

F2230

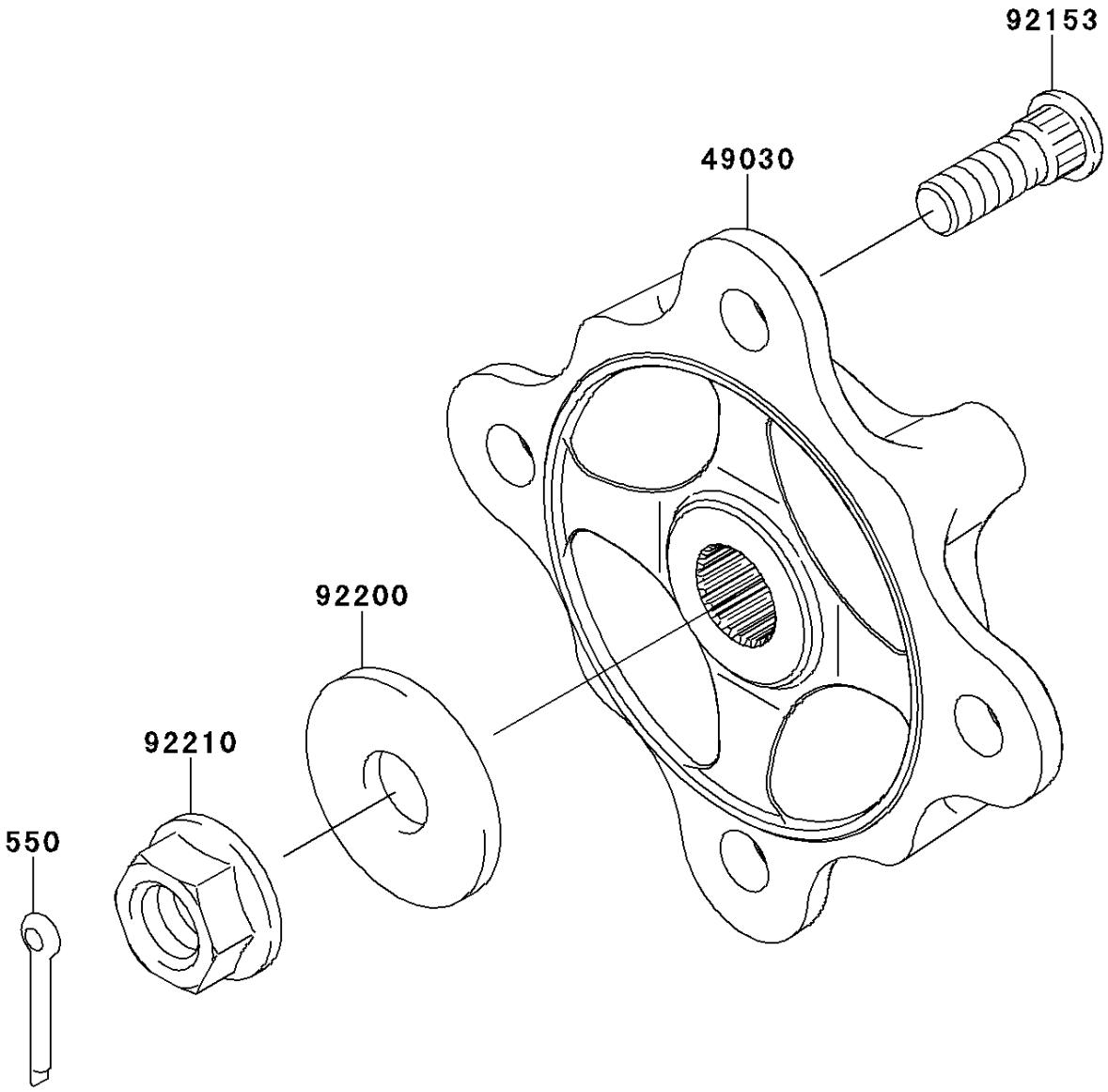

© 2026 Kawasaki Motors Corp., U.S.A.

2013 TERYX® 750 FI 4x4 SPORT

PARTS LIST

Front Hubs/Brakes

ITEM NAME	PART NUMBER	QUANTITY

© 2026 Kawasaki Motors Corp., U.S.A.