2013 TERYX® 750 FI 4x4 SPORT

PARTS DIAGRAM

Rear Fender(s)

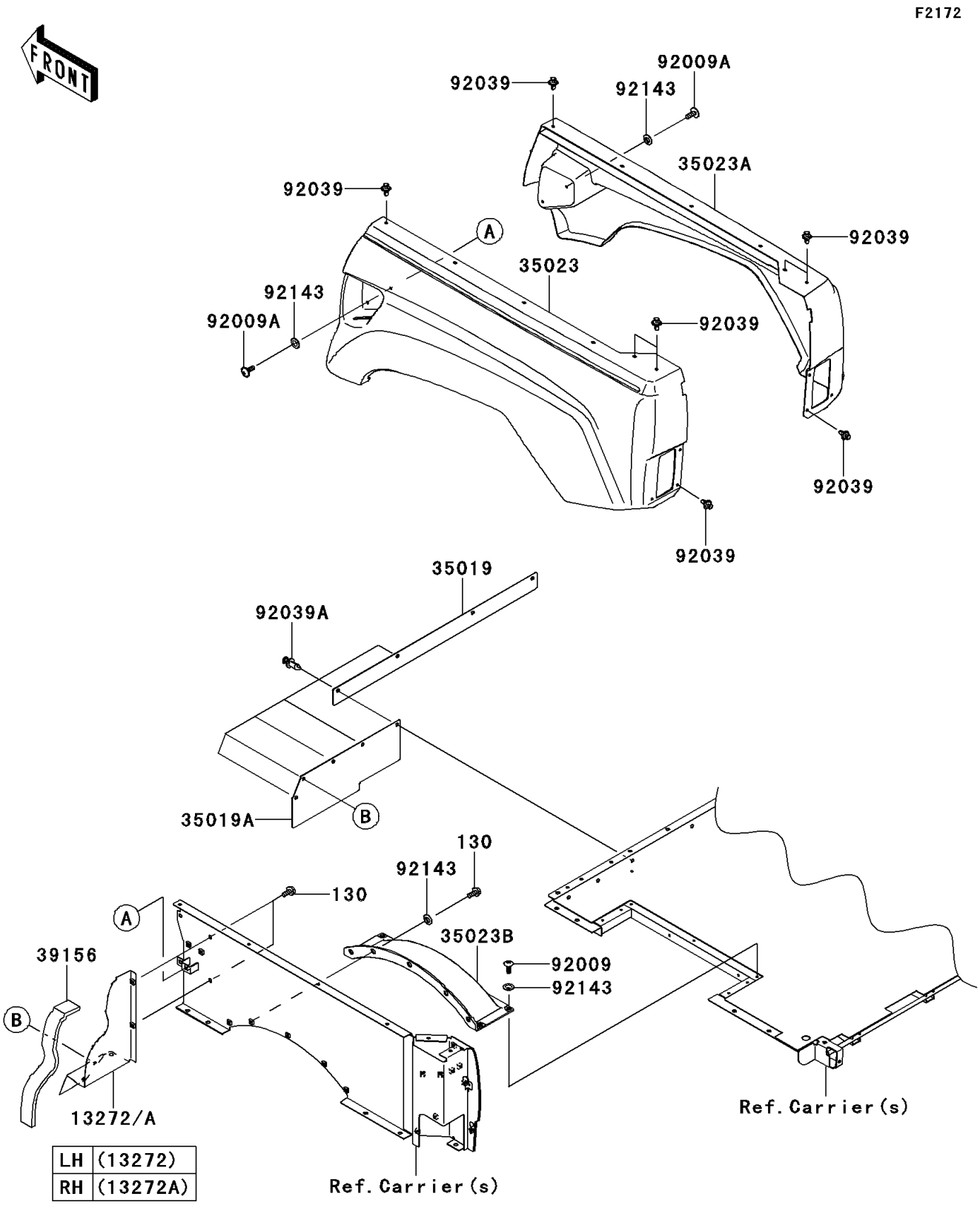

LH	(13272)
RH	(13272A)

© 2026 Kawasaki Motors Corp., U.S.A.

2013 TERYX® 750 FI 4x4 SPORT

PARTS LIST

Rear Fender(s)

ITEM NAME	PART NUMBER	QUANTITY
BOLT-FLANGED,6X14 (Ref # 130)	130BB0614	14
PLATE,REAR FENDER,INNER,LH (Ref # 13272)	13272-0688	1
PLATE,REAR FENDER,INNER,RH (Ref # 13272A)	13272-0689	1
FLAP,FRONT CARRIER,CNT (Ref # 35019)	35019-0084	1
FLAP,CARRIER,FR (Ref # 35019A)	35019-0090	2
FENDER-REAR,RR,LH,S.YELLOW (Ref # 35023)	35023-0139-40E	1
FENDER-REAR,RR,RH,S.YELLOW (Ref # 35023A)	35023-0140-40E	1
FENDER-REAR (Ref # 35023B)	35023-0151	2
PAD,REAR FENDER,INNER,LH&RH (Ref # 39156)	39156-0519	2
SCREW,TAPPING,6X16 (Ref # 92009)	92009-1166	10
SCREW,6X16 (Ref # 92009A)	92009-1621	2
RIVET (Ref # 92039)	92039-1227	18
RIVET (Ref # 92039A)	92039-1229	12
COLLAR (Ref # 92143)	92143-1087	22

© 2026 Kawasaki Motors Corp., U.S.A.