2004 KLR250

PARTS DIAGRAM

Owner's Tools

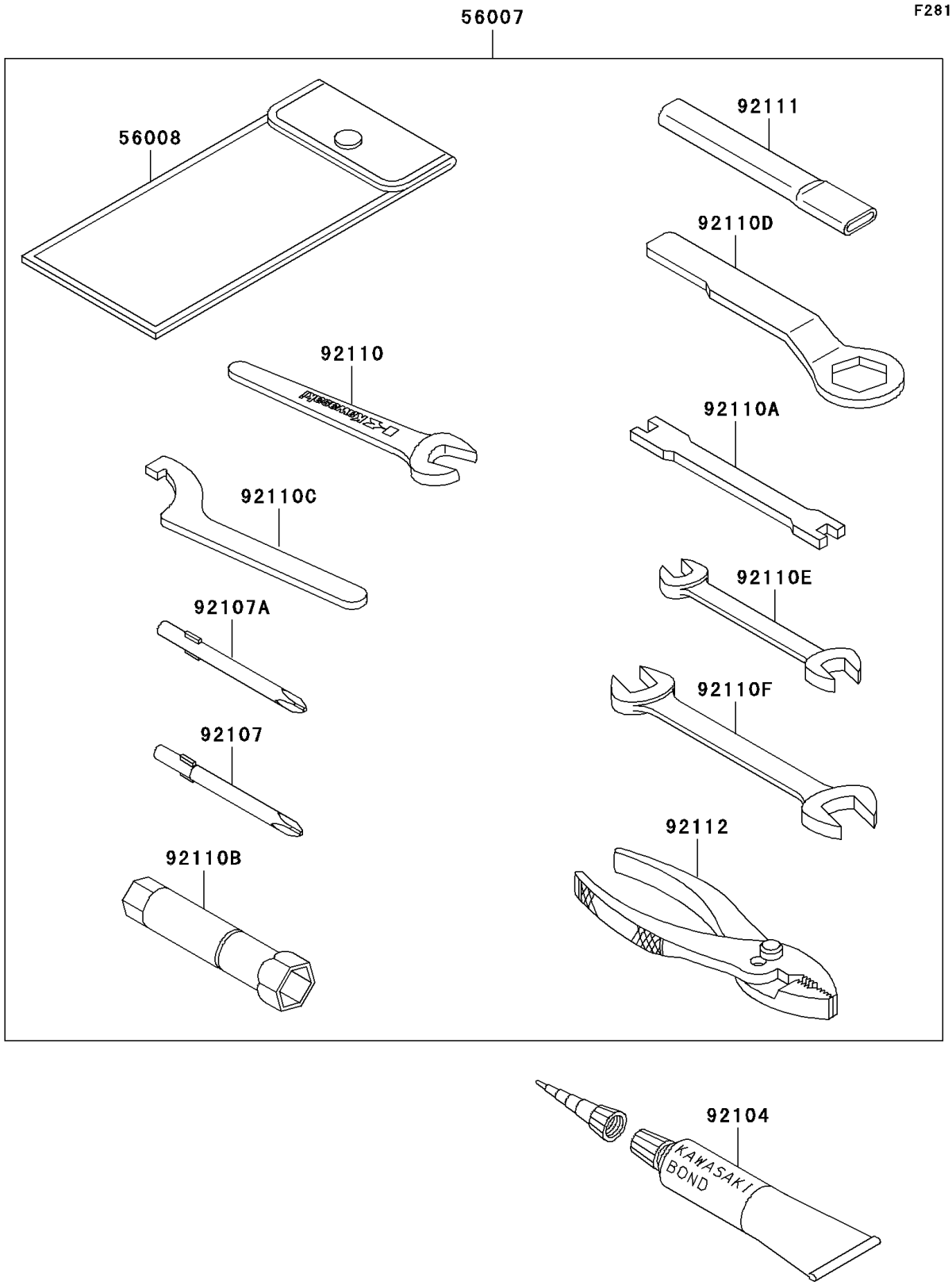

© 2026 Kawasaki Motors Corp., U.S.A.

2004 KLR250

PARTS LIST

Owner's Tools

ITEM NAME	PART NUMBER	QUANTITY
TOOLKIT (Ref # 56007)	56007-1294	1
BAG,TOOL (Ref # 56008)	56008-1075	1
GASKET-LIQUID,TUBE,100G,SILVER (Ref # 92104)	92104-002	1
TOOL-DRIVER,#3PHILLIPS (Ref # 92107)	92107-005	1
TOOL-DRIVER,#2PHILLIPS (Ref # 92107A)	92107-1053	1
TOOL-WRENCH,OPEN END,19MM (Ref # 92110)	92110-1004	1
TOOL-WRENCH,SPOKE (Ref # 92110A)	92110-1016	1
TOOL-WRENCH,BOX,18MM (Ref # 92110B)	92110-1111	1
TOOL-WRENCH,HOOK (Ref # 92110C)	92110-1128	2
TOOL-WRENCH,BOX END,24MM (Ref # 92110D)	92110-1150	1
TOOL-WRENCH,OPEN END,10X12 (Ref # 92110E)	92110-1152	1
TOOL-WRENCH,OPEN END,14X17 (Ref # 92110F)	92110-1153	1
TOOL-BAR,BOX END WRENCH (Ref # 92111)	92111-1051	1
TOOL-PLIERS (Ref # 92112)	92112-1001	1

© 2026 Kawasaki Motors Corp., U.S.A.