2004 KLR250

PARTS DIAGRAM

Cables

F2540

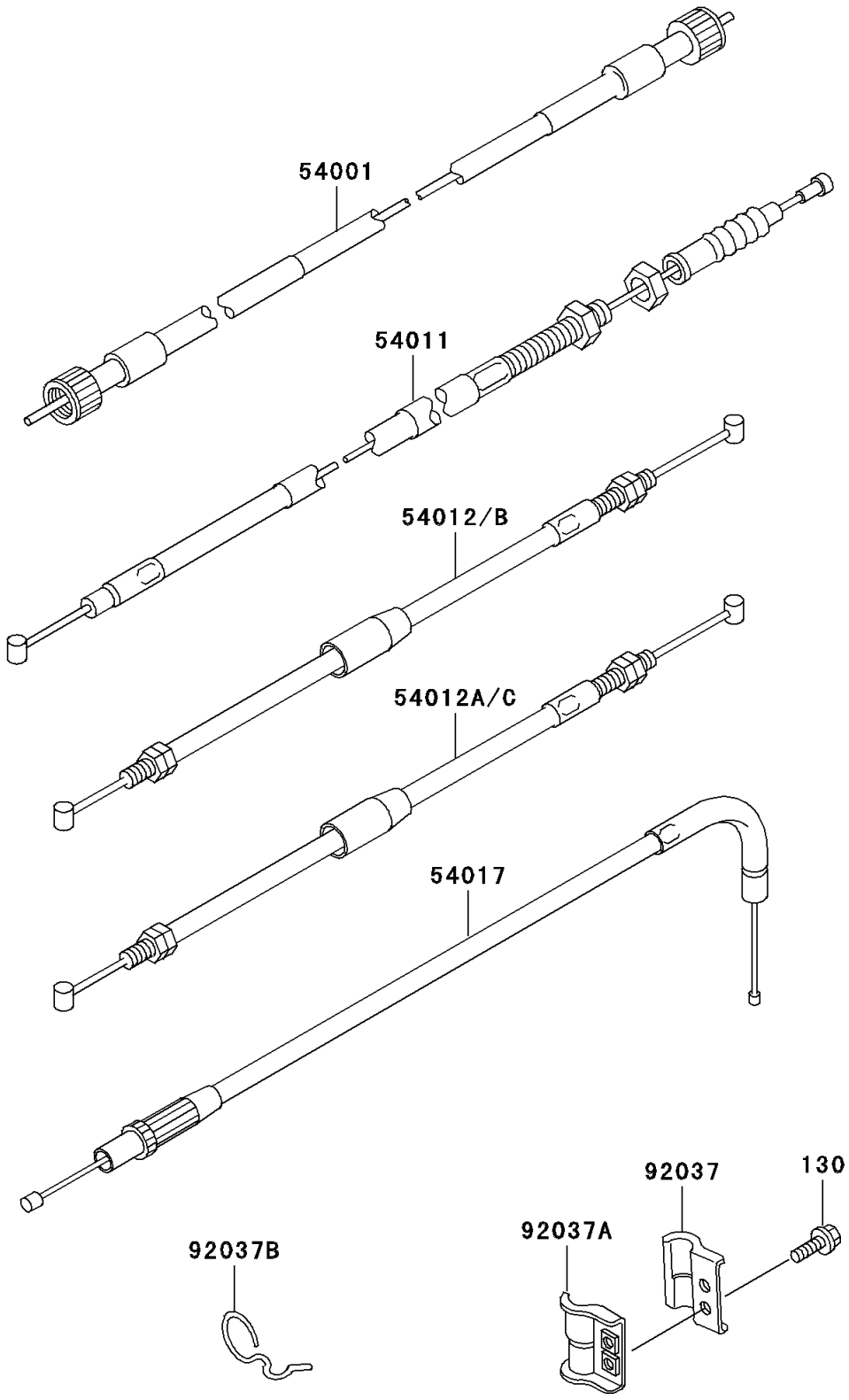

© 2026 Kawasaki Motors Corp., U.S.A.

2004 KLR250

PARTS LIST

Cables

ITEM NAME	PART NUMBER	QUANTITY
BOLT-FLANGED (Ref # 130)	130J0514	2
CABLE-SPEEDOMETER (Ref # 54001)	54001-1112	1
CABLE-CLUTCH (Ref # 54011)	54011-1225	1
CABLE-THROTTLE,OPENING (Ref # 54012B)	54012-1238	1
CABLE-THROTTLE,CLOSING (Ref # 54012C)	54012-1239	1
CABLE-STARTER (Ref # 54017)	54017-1058	1
CLAMP,BRAKE HOSE,OUTSIDE (Ref # 92037)	92037-1331	1
CLAMP,BRAKE HOSE,INSIDE (Ref # 92037A)	92037-1332	1
CLAMP (Ref # 92037B)	92037-1521	1

© 2026 Kawasaki Motors Corp., U.S.A.