2004 KLR250

PARTS DIAGRAM

Seat

F2510

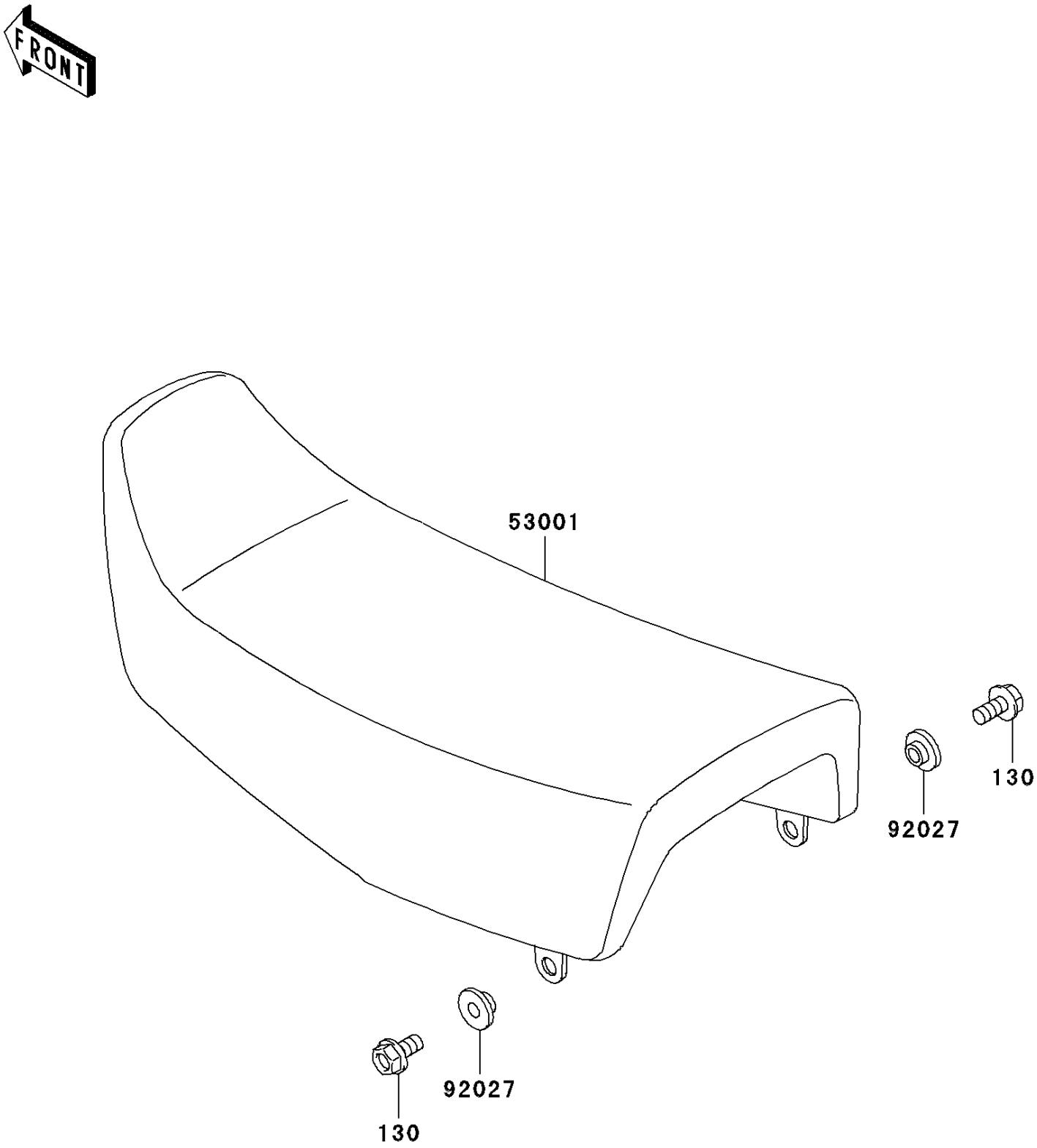

© 2026 Kawasaki Motors Corp., U.S.A.

2004 KLR250

PARTS LIST

Seat

ITEM NAME	PART NUMBER	QUANTITY
BOLT-FLANGED,6X12 (Ref # 130)	130B0612	2
SEAT-ASSY,DUAL,BLACK (Ref # 53001)	53001-1731-MW	1
COLLAR (Ref # 92027)	92027-1794	2

© 2026 Kawasaki Motors Corp., U.S.A.