2004 KLR250

PARTS DIAGRAM

Fuel Tank

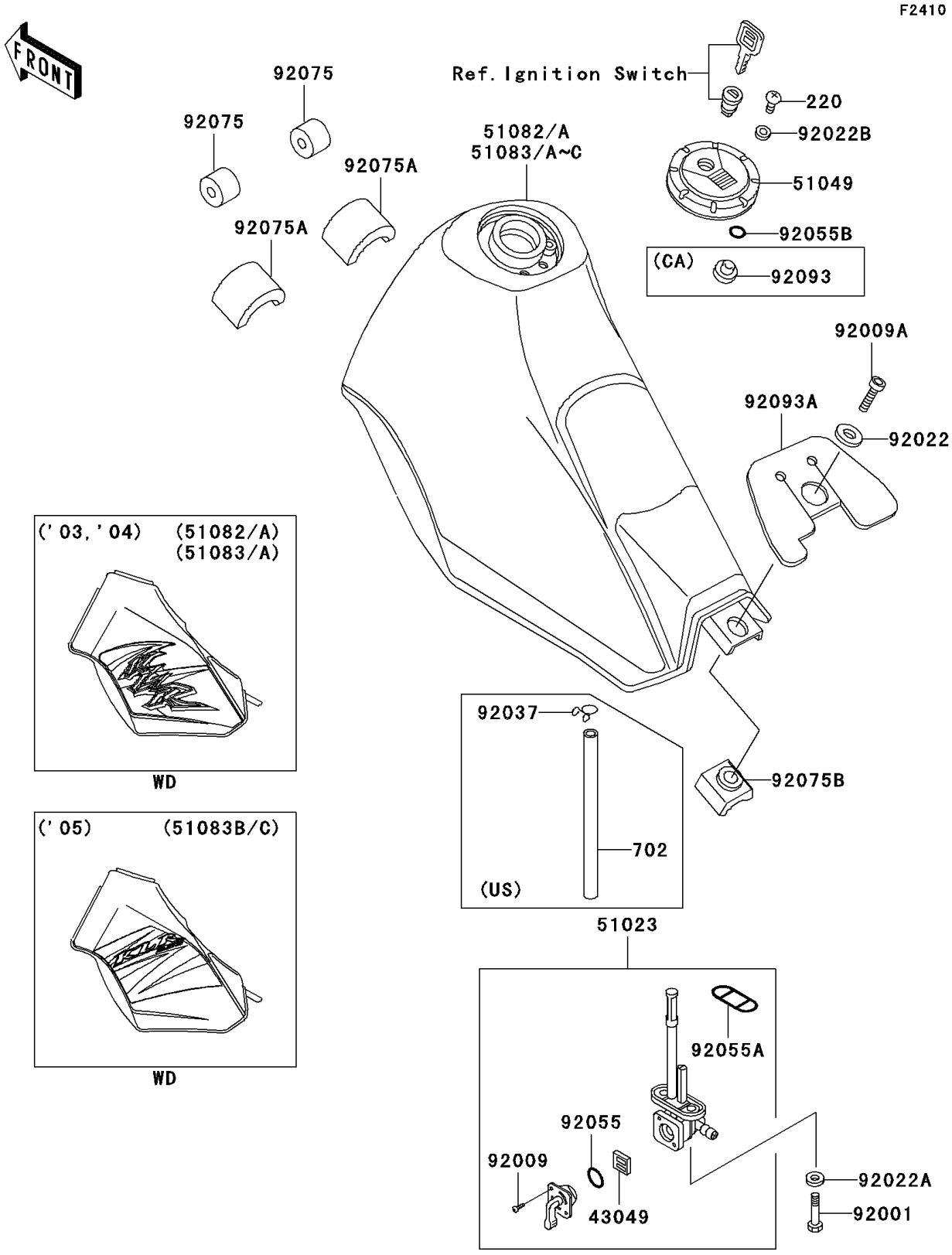

© 2026 Kawasaki Motors Corp., U.S.A.

2004 KLR250

PARTS LIST

Fuel Tank

ITEM NAME	PART NUMBER	QUANTITY
SCREW-PAN-CROS (Ref # 220)	220D0510	2
PACKING,VALVE (Ref # 43049)	43049-1102	1
TAP-ASSY,FUEL (Ref # 51023)	51023-1346	1
CAP-TANK,FUEL (Ref # 51049)	51049-1134	1
BOLT,6X20 (Ref # 92001)	92001-1091	2
SCREW,3X5 (Ref # 92009)	92009-1123	2
SCREW,6X8 (Ref # 92009A)	92009-1294	1
WASHER,6.2X38X1.2 (Ref # 92022)	92022-1659	1
WASHER,6.2X11X1.5 (Ref # 92022A)	92022-183	2
WASHER,5.1X10X1.0 (Ref # 92022B)	92022-1977	2
RING-O,FUEL TAP LEVER (Ref # 92055)	92055-1111	1
RING-O,FUEL TAP PACKING (Ref # 92055A)	92055-1112	1
RING-O,ID=9 (Ref # 92055B)	92055-1552	2
DAMPER,FUEL TANK (Ref # 92075)	92075-125	2
DAMPER,FUEL TANK (Ref # 92075A)	92075-1382	2
DAMPER,FUEL TANK (Ref # 92075B)	92075-1638	1
SEAL,FUEL TANK (Ref # 92093A)	92093-1182	1
TUBE-RUBBER,5X750 (Ref # 702)	702A05750	1
TANK-COMP-FUEL,EBONY (Ref # 51083)	51083-5090-H8	1
TANK-COMP-FUEL,EBONY (Ref # 51083A)	51083-5091-H8	1
CLAMP (Ref # 92037)	92037-1610	1
SEAL,FUEL TANK CAP (Ref # 92093)	92093-1030	1

© 2026 Kawasaki Motors Corp., U.S.A.