2004 KLR250

PARTS DIAGRAM

Rear Hub

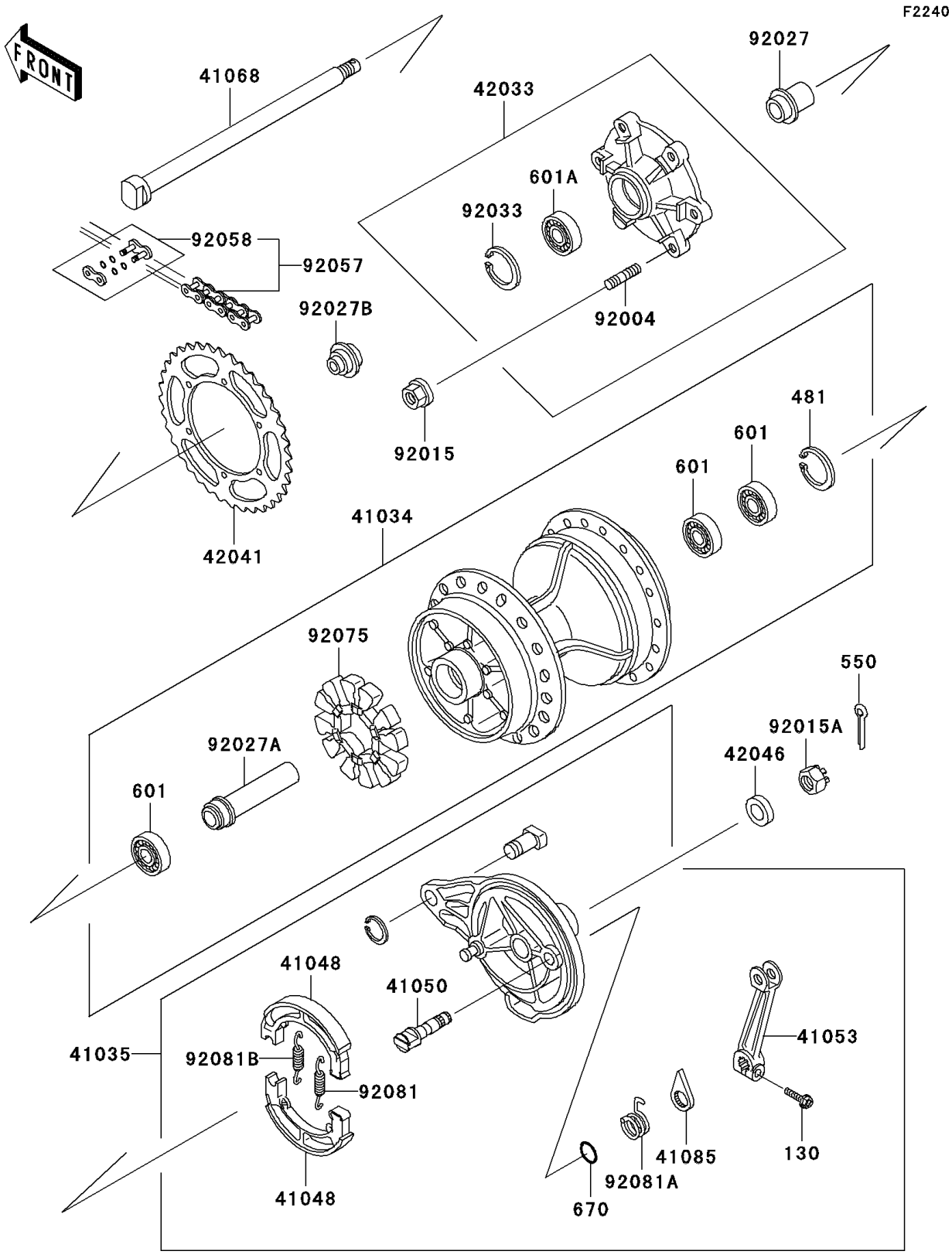

© 2026 Kawasaki Motors Corp., U.S.A.

2004 KLR250

PARTS LIST

Rear Hub

ITEM NAME	PART NUMBER	QUANTITY
BOLT-FLANGED,6X25 (Ref # 130)	130G0625	1
CIRCLIP-TYPE-C,35MM (Ref # 481)	481J3500	1
PIN-COTTER,4.0X35 (Ref # 550)	550D4035	1
BEARING-BALL,#6003UG (Ref # 601)	601B6003UG	3
BEARING-BALL,#6004UG (Ref # 601A)	601B6004UG	1
O RING,15MM (Ref # 670)	670B2015	1
DRUM-ASSY,REAR BRAKE (Ref # 41034)	41034-1113	1
PANEL-ASSY-BRAKE,RR (Ref # 41035)	41035-1289	1
SHOE-BRAKE (Ref # 41048)	41048-1084	2
CAM-BRAKE (Ref # 41050)	41050-1058	1
LEVER-BRAKE CAM (Ref # 41053)	41053-1061	1
AXLE,RR (Ref # 41068)	41068-1178	1
INDICATOR (Ref # 41085)	41085-005	1
COUPLING-ASSY,REAR HUB (Ref # 42033)	42033-1111	1
SPROCKET-HUB,44T (Ref # 42041)	42041-1191	1
WASHER,17.3X32X3.2 (Ref # 42046)	42046-009	1
STUD,8X18 (Ref # 92004)	92004-1149	6
NUT,8MM (Ref # 92015)	92015-1432	6
NUT,CASTLE,16MM (Ref # 92015A)	92015-1947	1
COLLAR,REAR HUB COUPLING,L=23 (Ref # 92027)	92027-1770	1
COLLAR,REAR BRAKE DRUM,L=78 (Ref # 92027A)	92027-1823	1
COLLAR,REAR HUB COUPLING,L=13 (Ref # 92027B)	92027-1826	1
RING-SNAP,42MM (Ref # 92033)	92033-1041	1
CHAIN,DRIVE,EK520LV-OX104L (Ref # 92057)	92057-0015	1
JOINT-CHAIN,DRIVE (Ref # 92058)	92058-1100	1
DAMPER,SHOCK,RR HUB (Ref # 92075)	92075-1068	1
SPRING,BRAKE SHOE (Ref # 92081)	92081-1550	1
SPRING,BRAKE CAM LEVER RETURN (Ref # 92081A)	92081-1615	1
SPRING,BRAKE SHOE (Ref # 92081B)	92081-1766	1

© 2026 Kawasaki Motors Corp., U.S.A.