2002 KLR250

PARTS DIAGRAM

Shock Absorber(s)

Kawasaki
Let the Good Times Roll®

F2280

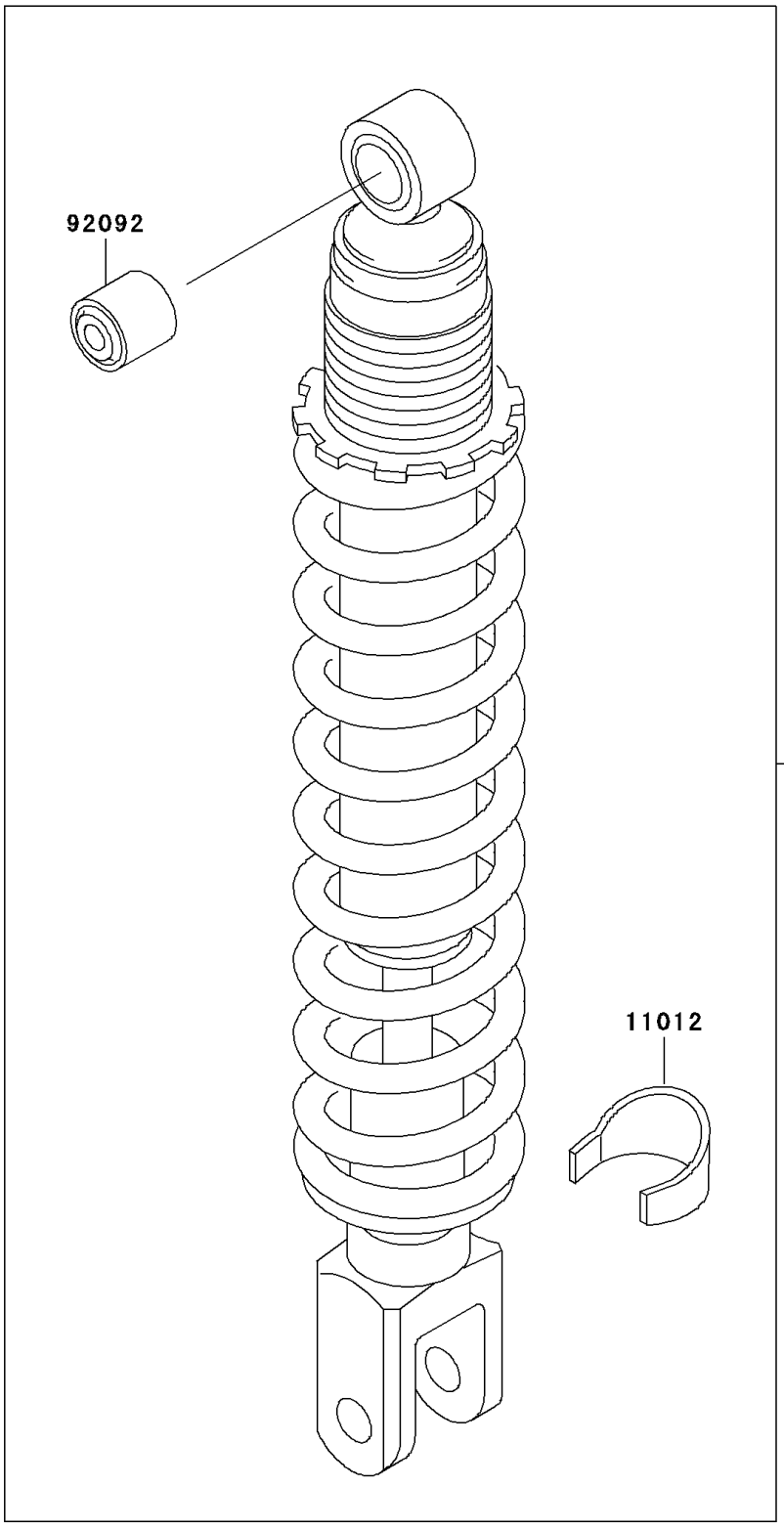

© 2026 Kawasaki Motors Corp., U.S.A.

2002 KLR250

PARTS LIST

Shock Absorber(s)

ITEM NAME	PART NUMBER	QUANTITY
CAP,SHOCKABSORBER (Ref # 11012)	11012-1398	1
SHOCKABSORBER,RR (Ref # 45014)	45014-1565	1
BUSHING-RUBBER,SHOCKABSORBER (Ref # 92092)	92092-1008	1

© 2026 Kawasaki Motors Corp., U.S.A.