2002 KLR250

PARTS DIAGRAM

Stand(s)

F2190

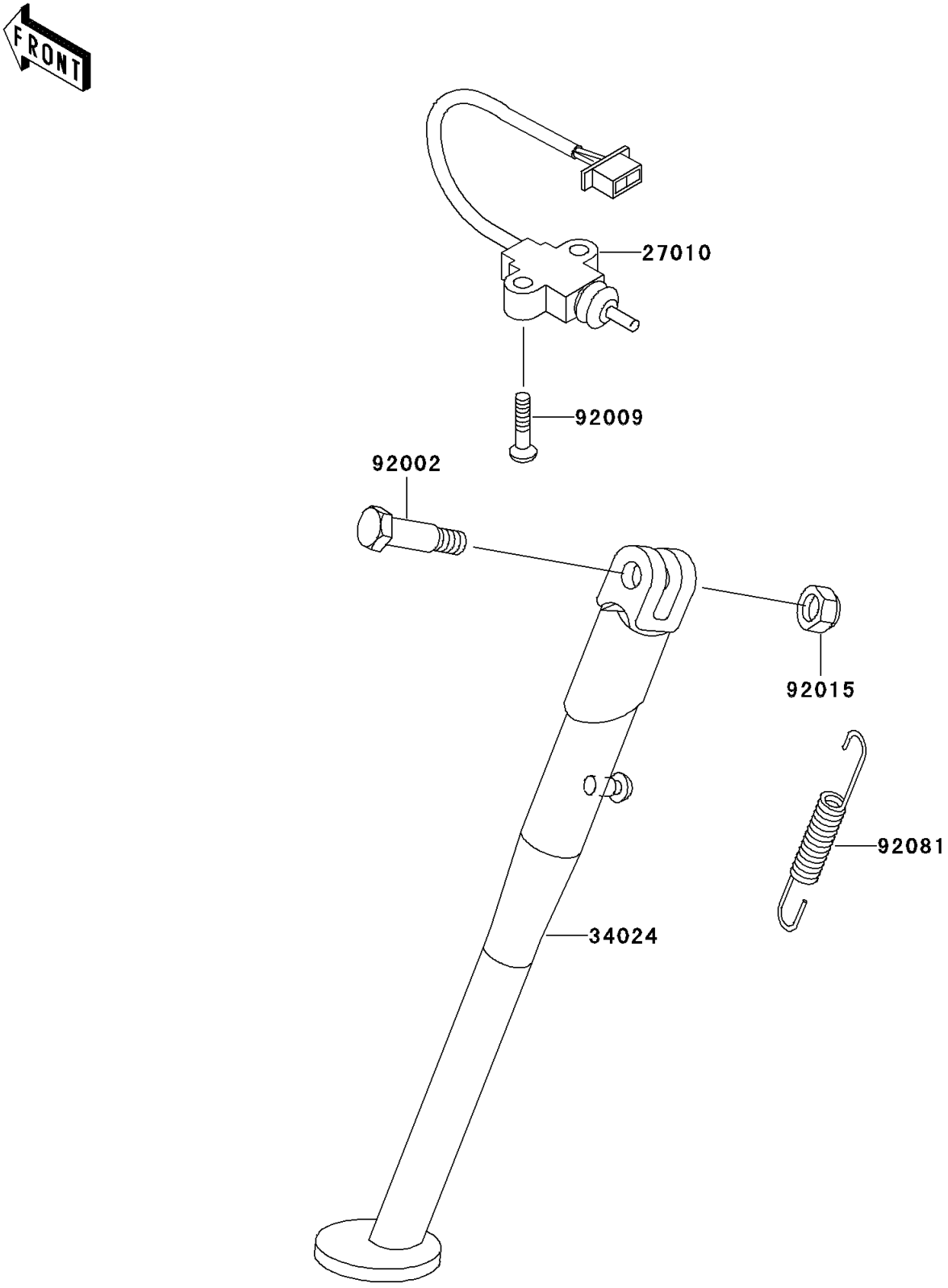

© 2026 Kawasaki Motors Corp., U.S.A.

2002 KLR250

PARTS LIST

Stand(s)

ITEM NAME	PART NUMBER	QUANTITY
SWITCH,SIDE STAND (Ref # 27010)	27010-1189	1
STAND-SIDE (Ref # 34024)	34024-1182	1
BOLT,SIDE STAND (Ref # 92002)	92002-1813	1
SCREW,5X20 (Ref # 92009)	92009-1359	2
NUT,LOCK,10MM,BLACK (Ref # 92015)	92015-1188	1
SPRING,SIDE STAND (Ref # 92081)	92081-1376	1

© 2026 Kawasaki Motors Corp., U.S.A.