2016 KLR™650

PARTS DIAGRAM

Chassis Electrical Equipment

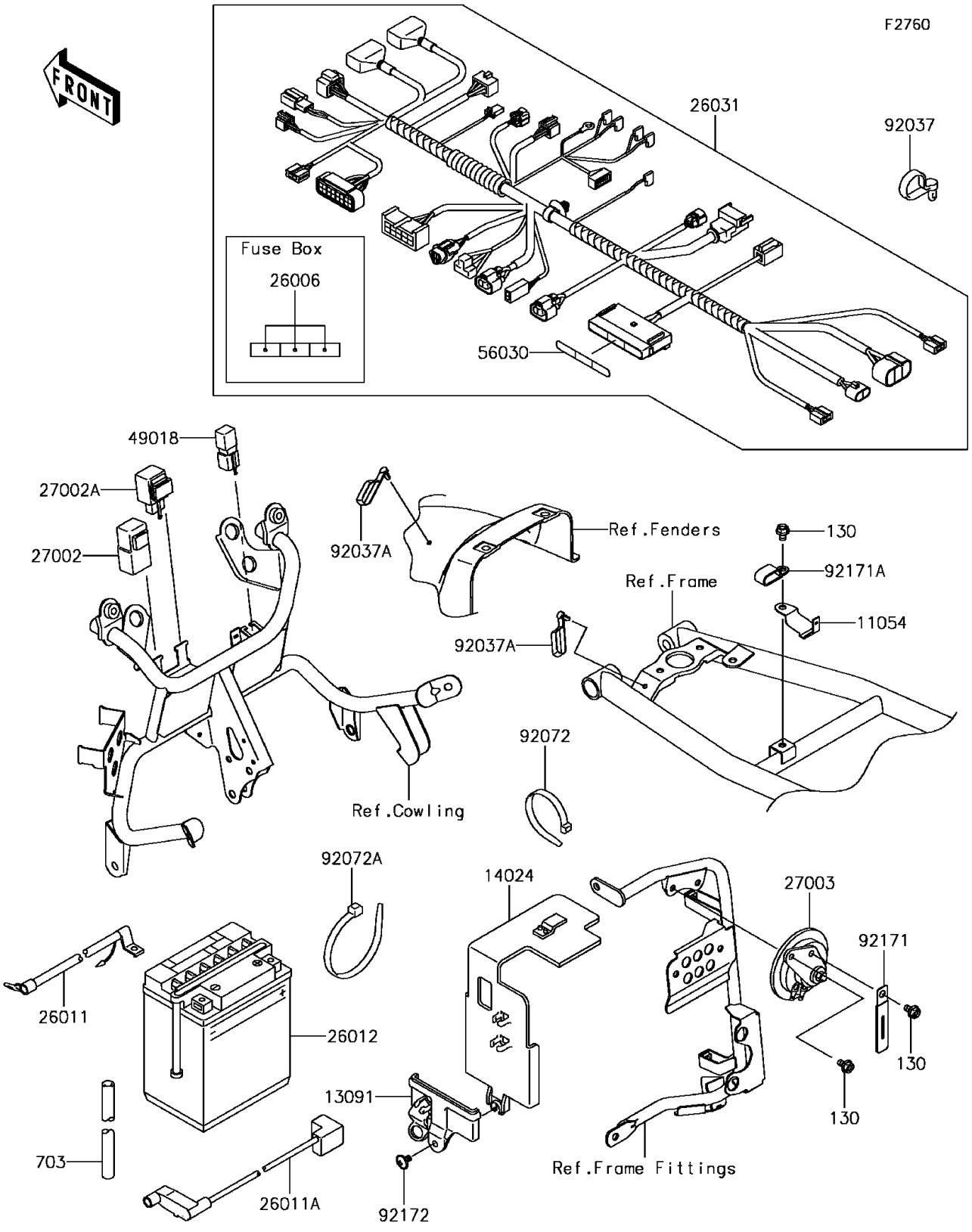

© 2026 Kawasaki Motors Corp., U.S.A.

2016 KLR™650

PARTS LIST

Chassis Electrical Equipment

ITEM NAME	PART NUMBER	QUANTITY
BOLT-FLANGED,6X10 (Ref # 130)	130BB0610	3
TUBE-RUBBER,8X12X580 (Ref # 703)	703A08580	1
BRACKET,FUSE CASE (Ref # 11054)	11054-0717	1
HOLDER,BATTERY COVER (Ref # 13091)	13091-1484	1
COVER,BATTERY (Ref # 14024)	14024-1375	1
FUSE,MINI BLADE,15A,BLUE (Ref # 26006)	26006-0001	3
WIRE-LEAD,BATTERY(-) (Ref # 26011)	26011-0116	1
WIRE-LEAD,BATTERY(+) (Ref # 26011A)	26011-0175	1
BATTERY,FB14L-A2,12V 14AH (Ref # 26012)	26012-0023	1
HARNESS,MAIN (Ref # 26031)	26031-0908	1
RELAY-ASSY (Ref # 27002)	27002-1088	1
RELAY-ASSY,TURN SIGNAL (Ref # 27002A)	27002-1101	1
HORN (Ref # 27003)	27003-0049	1
DIODE (Ref # 49018)	49018-0005	1
LABEL,FUSE BOX (Ref # 56030)	56030-0142	1
CLAMP,SPEED,L=58 (Ref # 92037)	92037-1163	3
CLAMP,SPEED,L=80.5 (Ref # 92037A)	92037-1903	2
BAND,L=202 (Ref # 92072)	92072-1195	2
BAND,L=365 (Ref # 92072A)	92072-1197	3
CLAMP,WIRING HARNESS,L=60 (Ref # 92171)	92171-1425	1
CLAMP (Ref # 92171A)	92171-1597	1
SCREW,6X10 (Ref # 92172)	92172-0005	1

© 2026 Kawasaki Motors Corp., U.S.A.