2016 KLR™650

PARTS DIAGRAM

Side Covers/Chain Cover

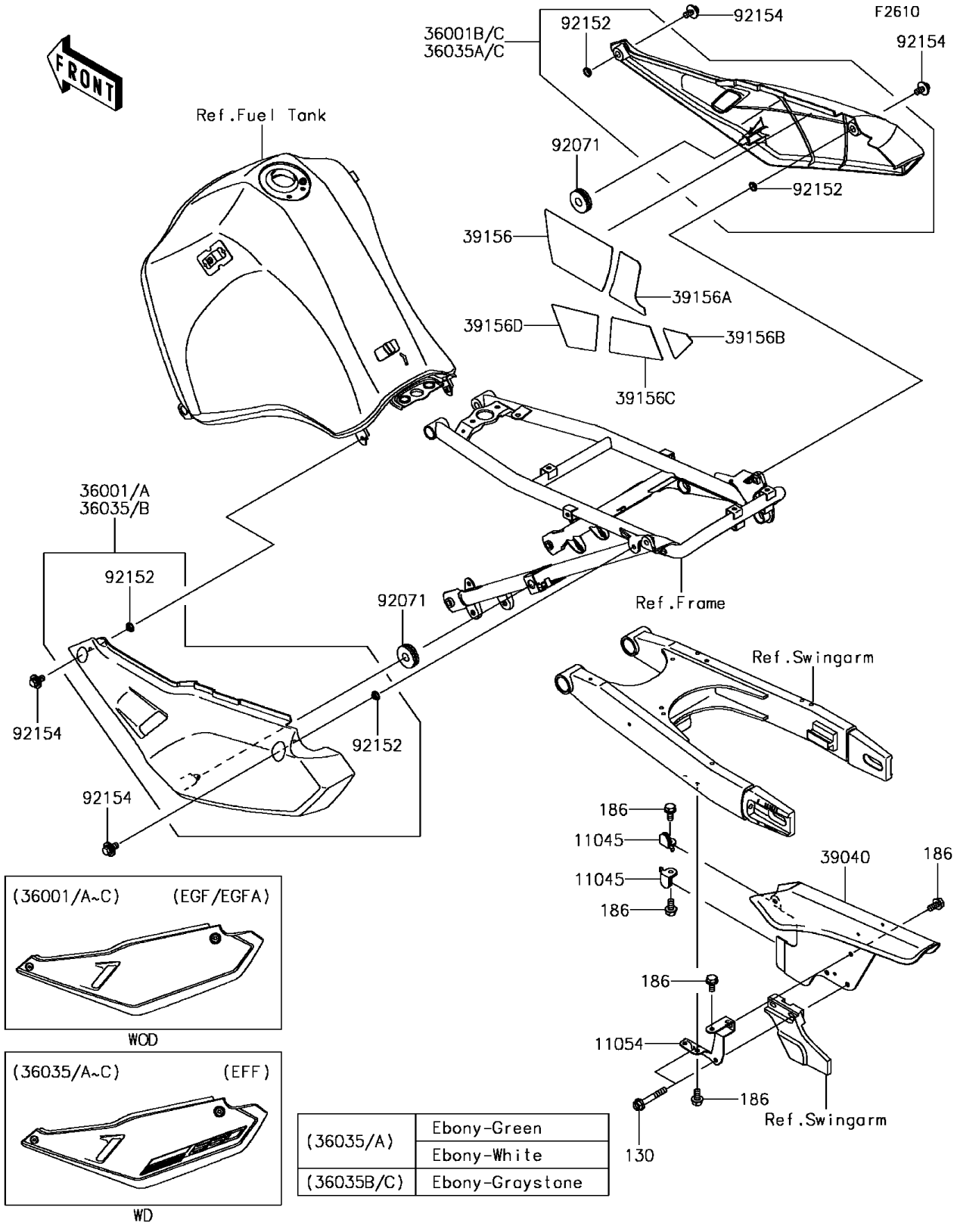

(36035/A)	Ebony-Green
	Ebony-White
(36035B/C)	Ebony-Graystone

© 2026 Kawasaki Motors Corp., U.S.A.

2016 KLR™650

PARTS LIST

Side Covers/Chain Cover

ITEM NAME	PART NUMBER	QUANTITY
BOLT-FLANGED,6X40 (Ref # 130)	130BA0640	2
BOLT-UPSET-WP,6X12 (Ref # 186)	186BA0612	5
BRACKET,CHAIN CASE,FR (Ref # 11045)	11045-1335	2
BRACKET,CHAIN CASE,RR (Ref # 11054)	11054-0390	1
COVER-SIDE,LH,EBONY (Ref # 36001A)	36001-0098-6C	1
COVER-SIDE,RH,EBONY (Ref # 36001C)	36001-0099-6C	1
COVER-ASSY-CHAIN CASE (Ref # 39040)	39040-0003	1
PAD,SIDE COVER,RH,UPP,FR (Ref # 39156)	39156-0652	1
PAD,SIDE COVER,RH,UPP,RR (Ref # 39156A)	39156-0653	1
PAD,SIDE COVER,RH,LWR,RR (Ref # 39156B)	39156-0654	1
PAD,SIDE COVER,RH,LWR,CNT (Ref # 39156C)	39156-0655	1
PAD,SIDE COVER,RH,LWR,FR (Ref # 39156D)	39156-0656	1
GROMMET (Ref # 92071)	92071-056	2
COLLAR,8.8X11.2X4 (Ref # 92152)	92152-0909	4
BOLT,FLANGED,6X12 (Ref # 92154)	92154-0369	4

© 2026 Kawasaki Motors Corp., U.S.A.