2017 Vulcan 1700 Voyager ABS

PARTS DIAGRAM

Swingarm

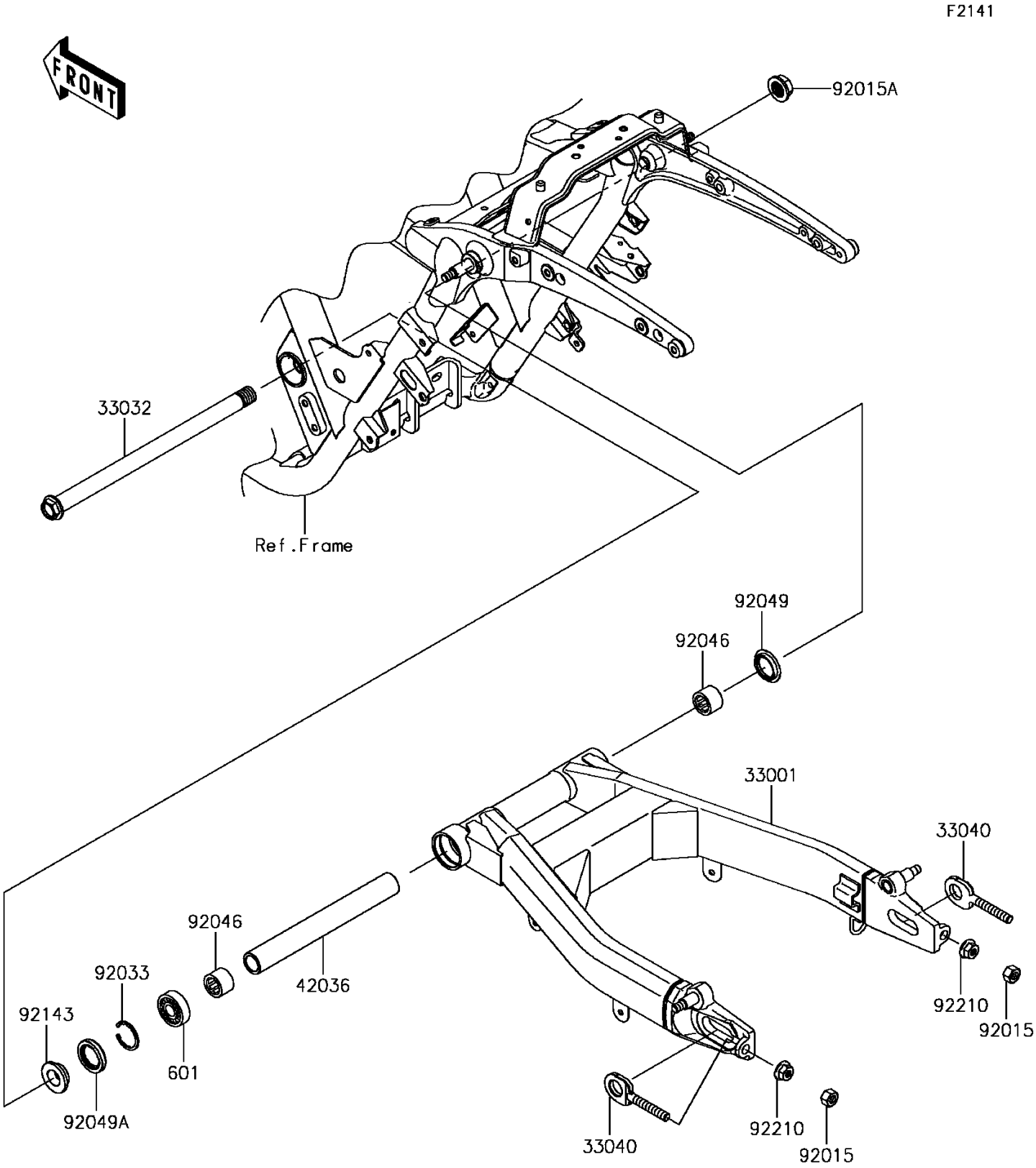

© 2026 Kawasaki Motors Corp., U.S.A.

2017 Vulcan 1700 Voyager ABS

PARTS LIST

Swingarm

ITEM NAME	PART NUMBER	QUANTITY
BEARING-BALL,#6004 (Ref # 601)	601A6004	1
ARM-COMP-SWING,F.S.BLACK (Ref # 33001)	33001-0205-18R	1
SHAFT-SWING ARM (Ref # 33032)	33032-0031	1
ADJUSTER-CHAIN (Ref # 33040)	33040-0005	2
SLEEVE,SWING ARM,L=235.5 (Ref # 42036)	42036-0059	1
NUT,LOCK,10MM (Ref # 92015)	92015-1494	2
NUT,FLANGED,20MM (Ref # 92015A)	92015-1724	1
RING-SNAP,42MM (Ref # 92033)	92033-1041	1
BEARING-NEEDLE,BM2824 (Ref # 92046)	92046-1202	2
SEAL-OIL,28X34X5.7 (Ref # 92049)	92049-1181	1
SEAL-OIL,TC28426.5 (Ref # 92049A)	92049-1185	1
COLLAR,SWING ARM,RH,L=12.5 (Ref # 92143)	92143-1727	1
NUT,FLANGED,10MM (Ref # 92210)	92210-0349	2

© 2026 Kawasaki Motors Corp., U.S.A.