1995 KLR250

PARTS DIAGRAM

Rear Suspension

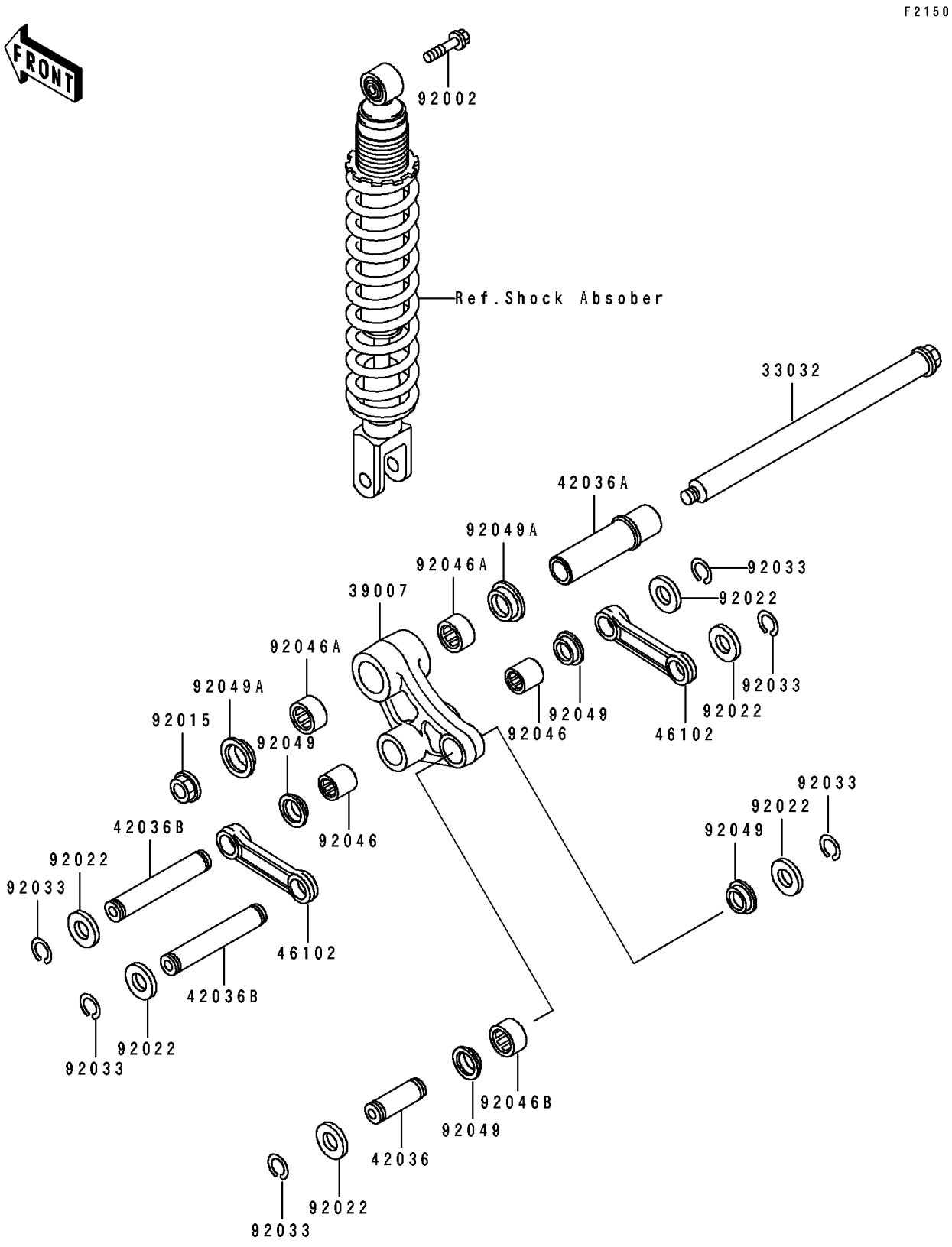

© 2026 Kawasaki Motors Corp., U.S.A.

1995 KLR250

PARTS LIST

Rear Suspension

ITEM NAME	PART NUMBER	QUANTITY
SHAFT-SWING ARM (Ref # 33032)	33032-1111	1
ARM-SUSP,UNI TRAK (Ref # 39007)	39007-1059	1
SLEEVE,L=59 (Ref # 42036)	42036-1133	1
SLEEVE,L=100 (Ref # 42036A)	42036-1136	1
SLEEVE,L=121 (Ref # 42036B)	42036-1140	2
ROD,UNI TRAK (Ref # 46102)	46102-1129	2
BOLT,12X55 (Ref # 92002)	92002-1130	1
NUT,14MM (Ref # 92015)	92015-1459	1
WASHER,20.1X28X1 (Ref # 92022)	92022-1547	6
RING-SNAP,18.3MM (Ref # 92033)	92033-1168	6
BEARING-NEEDLE,BM202726 (Ref # 92046)	92046-1110	2
BEARING-NEEDLE,BM2817 (Ref # 92046A)	92046-1111	2
BEARING-NEEDLE,BM202715 (Ref # 92046B)	92046-1112	1
SEAL-OIL,ARM,CNT (Ref # 92049)	92049-1109	4
SEAL-OIL (Ref # 92049A)	92049-1181	2

© 2026 Kawasaki Motors Corp., U.S.A.